The Challenge Machinery Company provides owner's manuals on its products solely as a courtesy to its customers. See the information below before using this manual.

These manuals are for reference only. These manuals include products which are non-current, unsupported or no longer produced by The Challenge Machinery Company, and are provided solely as an accomodation to our customers. By providing these manuals, The Challenge Machinery Company makes no representation or warranty as to the products, their current condition, or their suitability or fitness for use in any particular application, which are the sole and independent responsibility of the product owner and user.

Older products may not comply with current safety procedures, guidelines or regulations, and it is the product owner's and user's responsibility to evaluate the suitability and fitness of the products in their current use and application. The Challenge Machinery Company makes no representation, warranty or recommendation regarding any modifications which may be required on non-current or unsupported products. The Challenge Machinery Company assumes no liability for any modification or alteration to any Challenge product, and any such modification or alteration to any Challenge product is not authorized by The Challenge Machinery Company. The availability of these manuals is solely for the purpose of providing reference information for the products.

This manual may not be complete in all aspects of product maintenance and repair. **All products should be used only by qualified and properly trained personnel, following proper safety procedures.** All products should be regularly inspected and maintained, and their condition, application and use should be periodically evaluated by qualified personnel. Only qualified and properly trained technicians should perform maintenance, repair and replacement procedures. Attempting these procedures without proper training may cause machine damage or operator injury!

Products may be unsupported by The Challenge Machinery Company due to age or the unavailability of parts from their original manufacturer. No parts or product support will be available to repair or maintain unsupported products. Older products may not be UL listed (if the product does not have a UL label it is not a listed product), and may not comply with applicable installation or other regulations or requirements if relocated to a new facility. Many municipalities require a product to be UL listed before an electrician will connect power to them. Often the cost of updating an older product to comply with current safety regulations is greater than the value of the product.

Serial Numbers 98101 & Up

Instruction and Parts Manual

CHAMPION 370

PAPER CUTTING MACHINE

Models XG & XT

Sold and Serviced by

The Challenge Machinery Company
1433 Fulton Avenue
Grand Haven, MI 49417-1594 USA

ChallengeMachinery.com

F.370
Apr. 2014

1.0 Introduction

THIS MANUAL is designed to help you get the most from your Challenge equipment. Keep this manual in a safe, convenient place for quick reference by operators and service personnel.

⚠ CAUTION **SAFETY ALERT!** This symbol means **CAUTION: Personal safety instructions!** Pay special attention to the instructions in bold type. Personal injury may result if the precautions are not read and followed.

READ THIS MANUAL BEFORE OPERATING! Follow precautions and instructions given and you should have years of trouble-free operation. If after reading the manual questions still remain, contact your Authorized Challenge Dealer.

FOR PARTS AND SERVICE contact the Authorized Challenge Dealer from whom you purchased your machine. Use the illustrations and parts lists at the back of this manual to identify the correct parts needed. Always give the **SERIAL NUMBER** and **MODEL** of your machine to insure the correct parts are sent as soon as possible.

Take a few minutes right now to **RECORD YOUR MACHINE SERIAL NUMBER** in the space provided on the front cover of this manual. Also be sure to fill out the warranty card accompanying your machine and return it **DIRECTLY TO CHALLENGE.**

If you bought a used machine, it is important to have the following information on record at Challenge. Copy this page, fill in the information and send it care of The Challenge Service Department, 1433 Fulton Avenue • Grand Haven • MI 49417-1594.

CHALLENGE MODEL	SERIAL NUMBER	
ATTN	COMPANY	
ADDRESS		
CITY	STATE/PROVINCE	ZIP
PHONE	DATE INSTALLED	
DEALER NAME & CITY		

*** WARRANTY INFORMATION ***

It is very important that you read and understand the conditions outlined in the *Warranty Information Sheet* attached to the outside of the shipping container of your machine.

The *Warranty Information Sheet* must be filled out completely and returned to THE CHALLENGE MACHINERY COMPANY in order for the warranty to be issued for this machine.

TABLE OF CONTENTS

2.0 Safety

2.1 Precautions

- This machine is designed for one-person operation. Never operate the machine with more than one person.
- Safe use of this machine is the responsibility of the operator. Use good judgment and common sense when working with and around this machine.
- Read and understand all instructions thoroughly before using the machine. If questions remain, contact the dealer from which you purchased this machine. Failure to understand the operating instructions may result in personal injury.
- Only trained and authorized people should operate this machine.
- Do not alter safety guards or devices. They are for your protection. Severe personal injury may result.
- Disconnect power before cleaning or performing maintenance. See Section 2.2 Power Lockout Procedure.
- Observe all caution labels on this machine.
- Be sure the cutter is properly grounded.
- Be sure there is sufficient power to operate the cutter properly.
- Observe all caution plates mounted on this cutter.
- Keep foreign objects off table and away from cutter blade.
- **BE EXTREMELY CAREFUL** when handling and changing the cutter knife. Severe lacerations or dismemberment could result from careless handling procedures.
- Keep the floor around the cutter free of trim, debris, oil and grease.
- When replacing hydraulic parts, loosen the connections slowly to release pressure. Never loosen connections with the machine running.
- If the cutter sounds or operates unusually, turn it off and consult the troubleshooting section of this manual. If the problem cannot be corrected, have it checked by a qualified service person.
- **CRUSH HAZARD**, keep hand and fingers from under the clamp when clamping paper. Use Jogging Aid to load paper, and use the backgauge to push paper out before unloading. **DO NOT REACH UNDER THE KNIFE AND CLAMP AREA!**

2.2 Power Lockout Procedure

For maximum safety when making adjustments or repairs to your machine, be sure to lock out the main power control switch to which the machine is connected. The switch should be moved to the OFF position and a padlock placed in the loop. The key should be held by the person servicing the machine.

Figure 1

2.3 Warning Label Definitions

The following warning labels are found at various locations on your machine. Read and understand the meaning of each symbol. If a label is lost from the machine, it should be replaced. The item number and location of each label can be found in Section ******.

HAZARDOUS AREA

Disconnect power before cleaning, servicing, or making adjustments not requiring power. Do not alter safety guards or devices; they are for your protection. Replace all guards. Do not operate with any guards removed.

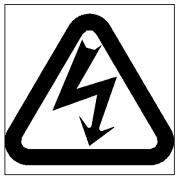

SHOCK HAZARD

Disconnect power before removing cover. Replace cover before operation.

v

!OJO!

⚠ CAUTION This Este simbolo de alerta de seguridad significa ¡ OJO ! - INSTRUCCIONES DE SEGURIDADPERSONAL. Lea las instrucciones porque se refieren a su seguridad personal. Fall de obedecer las instrucciones que siguen podria resultar en lesiones corporales.

- Esta maquina, junto con sus mecanismos de seguridad, esta disenada para ser manejada por
- **UNA SOLA PERSONA** a la vez. Jamas debe ser manejada por mas de una persona al mismo
- tiempo.
- La seguridad es la responsabilidad del operario que usa esta maquina.
- **LEA DETENIDAMENTE** el manual de instrucciones y las **PRECAUCIONES DE SEGURIDAD** antes de poner a funcionar la cortadora. Pidale a su supervisor una copia.
- El manejo de la guillotina debe estar exclusivamente a cargo de personal entrenado y autorizado para ello.
- **NO MODIFIQUE LOS MECANISMOS DE SEGURIDAD**, estan ahi para su proteccion no deben ni modificarse ni quitarse.
- **DESCONECTE LA CORRIENTE ELECTRICA** antes de proceder a hacerle servicio de limpieza, engrasar, o de hacer adjustes que no requieren corriente. Trabe el interruptor en la posicion **OFF** (apagado); vea “Procedimiento para cortar la corriente electrica” al pie de esta pagina.
- Eche llave a la guillotina y quite la llave cuando la maquina no esta en operacion; vea “Corriente electrica”.
- Asegurese de que la guillotina este debidamente a tierra. Vea “Conexion de la fuerza electrica”.
- Verifique el voltaje y asegurese de que este sea suficiente para el debido funcionamiento de la guillotina.
- Preste atencion a todas las placas con advertencias instaladas en esta guillotina.
- No permita que objetos estranos esten en la mesa o cerca de la cuchilla cortadora.
- **TENGA SUMO CUIDADO** al tocar y cambiar la cuchilla. Heridas severas y hasta desmembramiento pueden resultar del manejo sin cuidado o negligente.
- El suelo alrededor de la guillotina debe mantenerse despejado y libre de recortes, desperdicios, aceite y grasa.
- Al haber la necesidad de reemplazar partes hidraulicas, afloje todas las conexiones poco a poco para dejar escapar la presion. Jamas debe aflojarse conexiones mientras la maquina este
- andando.
- Si la guillotina empezara a sonar o trabajar diferentemente a lo acostumbrado, desconectela y consulte la seccion “Troubleshooting” (Reparador) de este manual. Si no es posible corregir el problema, llame a su servicio autorizado para que le examinen la maquina.
- **PELIGRO DE MACHUQUE** - Mantenga manos y dedos fuera de la agarradera mientras sujeta el papel. Use el calibrador trasero y su rueda de mano para empujar el papel cortado. **NO PONGA SUS MANOS BAJOLA CUCHILLA O AREA DE LA AGARRADERA.**
- **NO OPERE SIN LAS GUARDAS PROTECTORAS!**

¡ OJO ! PRECAUCION - Como proceder para desconectar la corriente electrica.

Para maxima seguridad durante ajustes y reparaciones de su maquina, verifique bien que el interruptor principal de control de corriente al cual la maquina esta conectada, este desconectado. El interruptor deba ser puesto en la posicion “OFF” (desconectado) y se debe poner un candado en la anilla. La llave del candado debe ser guardada por la persona que estara efectuando los trabajos de servicio o de reparacion en la guillotina.

Desconecte la corriente electrica antes de proceder a hacer cualquier ajuste o reparacion o de efectuar el engrase en cualquier maquina.

3.0 Packing List

Part No.	Description	Qty.
	Basic Machine	1
Extension Side Tables:		
16026	36” Steel Side Table (LH)	1
16027	36” Steel Side Table (RH)	1
49147	Side Table Back Plate (LH)	1
49080	Side Table Back Plate (RH)	1
A-8495	Side Table Support (LH)	1
A-8496	Side Table Support (RH)	1
H-6913-606	Side Table Bolts	10
H-6424-6	Side Table Hex Nuts	10
H-6913-606	Side Table Mounting Bolts (shipped installed)	8
H-7321-6	Side Table Mounting Washers (shipped installed)	8
49012	False Clamp Plate (shipped installed)	1
49055	Knife	2
H-6918-608	Knife Bolts	9
8815	Knife Washers, Special	9
4173	Cutting Sticks (one installed)	4
A-12608-6	Jogging Aid	1
Tool Kit (P/N: K-49000):		
S-1245-5	Knife Lifters	2
5064	Cutting Stick Puller	1
W-178	5/16 Ratcheting Box Wrench	1
W-164	Hex “T” Wrench	1
W-158	5/16 Open End Wrench	1
W-141	1/8”	1
W-137	5/32”	1
Fuses:		
E-2308	3.2 A	1
E-2330-7	5 A.S.B.	1
E-889-35	1 A.S.B.	1
E-889-5	4 A.S.B.	1
E-889-9	8 A.S.B.	1
E-2330-8	6.3 A.S.B.	1
E-2330-3	2 A.S.B.	1

4.0 Specifications

Description	Inch Units	Metric Units
Cutting Width	37”	94.0 cm
Clamp Opening	5-1/4”	13.3 cm
Clamping Force	2000-6900 lbs.	8896 – 30693 N
Minimum Cut – Standard	¾”	1.9 cm
- w/ False Clamp Plate	2-5/8”	6.7 cm
Table Space Front: (std.) Back:	 25” 40”	 63.5 cm 101.6 cm
Dimensions		
Table Height	36”	91.4 cm
Overall Height	60”	152.4 cm
Overall Length	86 ¼”	219 cm
Overall Width	48 ½”	123 cm
w/ Side Tables	109”	276.9 cm
w/o Side Tables	63 ¼”	160.7 cm
Approx. Net Weight	3750 lbs	1701 kg
Approx. Shipping Weight	4200 lbs	1905 kg
Will pass through door:		
Assembled	63 ½”	162 cm
Table/treadle out	35”	89 cm
Electrical		
Standard: 10 HP, 3 Phase, 60 Hz AC; 208/230V ± 10% @ 38A *or* 460V ± 10% @ 16.5A		
Spacer		
XG series spacer has 4000 cuts on 99 channels. Minimum space between cut positions is 0.005” or .1mm. Repeat positioning accuracy is 0.003” or 0.05mm.		

European Electric Eyes
- Response time < 100 ms
- Object detection capability – 32 mm
- Min. curtain separation – 350 mm

Challenge reserves the right to make changes to any product or specification without notice and without incurring responsibility to existing units.

5.0 Installation & Setup

5.1 Inspecting Shipment

This machine has been carefully packed to prevent damage during shipment. However, claims for damage or loss are the responsibility of the recipient. Inspect all shipments as soon as they are received. If there is any noticeable damage, note it on the freight bill. Visual and/or hidden damage must be reported to the claims department of the carrier within 15 days. Contact your dealer if you need any assistance. Check the contents of the box against the packing list on page 9. Make sure there are no missing items.

5.2 Uncrating

This machine is lagged to a wood skid and covered with a triple-walled corrugated container. Loosen the flaps of the carton where they are attached to the skid. When loose, the carton can be lifted straight up. Remove the side tables and accessory box, which are also attached to the skid. Place the cutter/skid about where the machine will be positioned and remove the lag screws from the skid.

Remove the lower shipping block holding the counter weight up. It is secured in place with a lag screw and washers. Remove the upper shipping block, which is also secured in place with a lag screw and washers. If the upper wood block cannot be removed because the knife bar is in the way, wait until the machine is powered up for the first time and remove the upper wood block when the knife bar has been raised under power.

Make sure that both of the rollers, for the counter weight, are riding on the guide shaft. It is possible that during shipping, one may have moved off of the shaft. The rollers are located on the top and bottom of the counter weight. The counter weight is located inside the left front enclosure door behind the clamp cylinder. Make sure if the machine is ever reshipped the counter weight is blocked up so that there is slack in the counter weight chain and the counter weight does not bounce (Figure 2). The counter weight should be blocked/ held up with a wood 2x4 piece of lumber 11-5/8” long. This block needs to be secured in place with a lag screw and washers as shown in Figure 2.

Remove the shipping block securing the paper deflector. This shipping block is wedged between the bottom of the paper deflector assembly and the mounting pin for the paper deflector extension spring. The shipping block is held in place by a cable tie. The cable tie and shipping block are accessible through the left arch access hole by removing the left arch end cover (Figure 3). If the machine is ever reshipped, a 1” X 2” piece of lumber (actual size 3/4” X 1-1/2”) 17” long should be wedged in between the paper deflector assembly and the mounting pin for the paper deflector extension spring as it was when shipped from the factory.

Before the machine can be run for the first time, the 3/4 NPT plug in the reservoir needs to be replaced with the breather cap, see section 5.7 Hydraulic Check on page 17.

Proceed to Lifting Instructions.

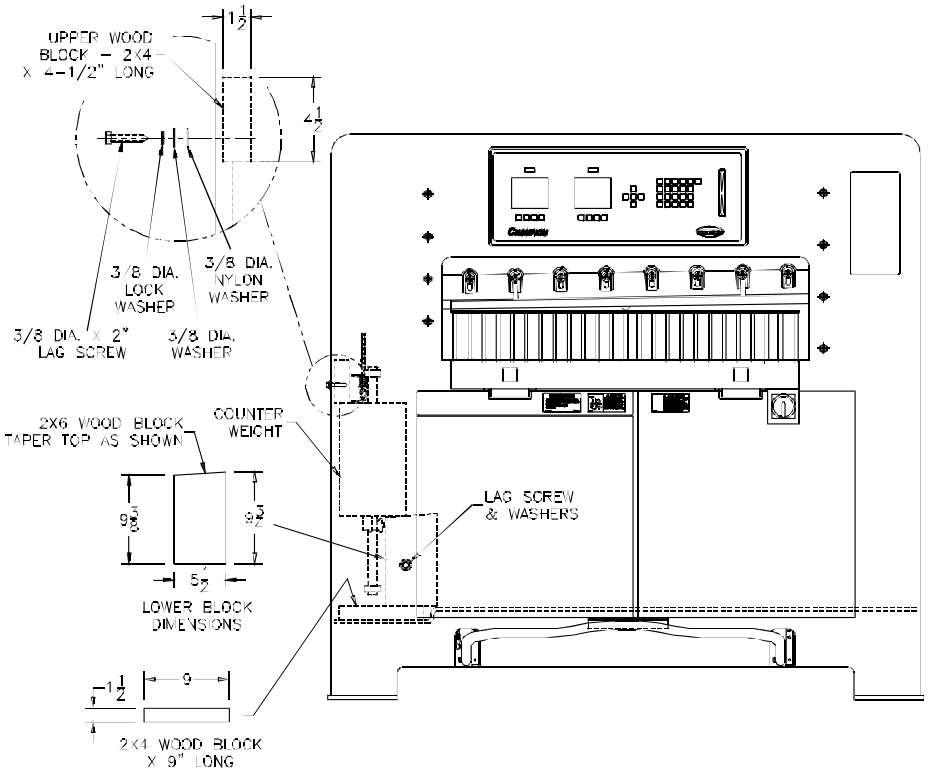

Figure 2

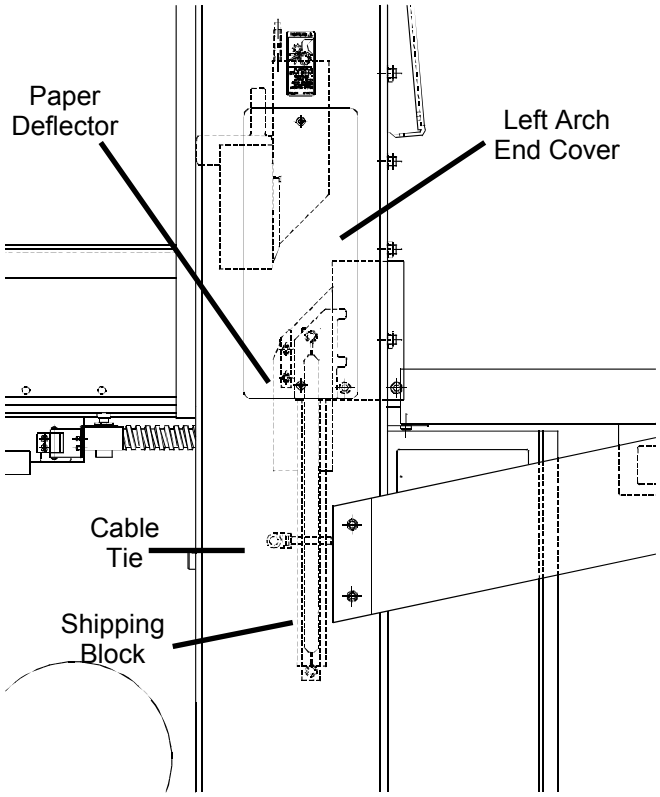

Figure 3

5.3 Lifting Instructions

Unpacking, handling, and positioning should be done by professional handlers. If handling or unpacking is a problem, your dealer or a local trucking facility should be able to supply or recommend a qualified rigger. This 2550-lb/1157-kg machine should be moved with experienced people and the proper equipment. DO NOT RISK personal injury or damage by attempting to move machinery with makeshift equipment or inadequate manpower.

Lifting straps may also be used to lift the machine by placing the straps around the front and rear of the table. When straps are used in this way, wood blocks must be placed beside the lead screw to prevent damage, (Figure 4). A bent lead screw will cause the backgauge to bind.

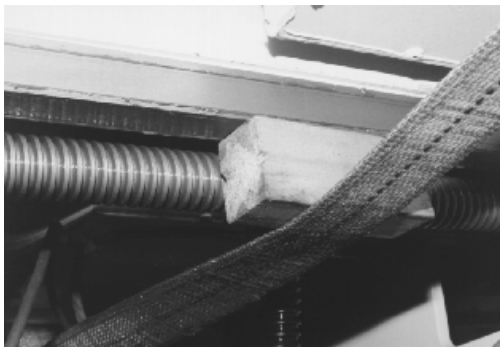

Figure 4

The backgauge should be positioned all the way to the front of the table and straps placed as close the machine body as possible. Gently lift the cutter, remove the skid and carefully place the cutter on the floor.

5.4 Cleaning

Wipe down the table and bare metal surfaces with a non-flammable solvent such as CRC or blanket wash. The table surface is cast iron and will rust if left unprotected. Coat the table with a non-abrasive wax. A Cutter Care Kit, p/n 16077, with cleaner and wax, is available thru your Authorized Challenge Dealer. The protective film on the console may be removed. ***Never*** clean console with petroleum based solvents. Damage will result. See also Operator Cleaning on page 50.

5.5 Assembly: Standard

Unless otherwise specified, the only items that have been disassembled for shipping are the knife and extension side tables. Knife installation will be covered later. Side table attachment follows.

NOTE: Assembled side tables are awkward and heavy. Use two people to attach the side tables.

1. Install the side table supports. Each support is attached to the frame with two (2) bolts and washers. (Mounting bolts are shipped installed in the frame - remove them to install supports.)

2. Thread the 1/2-13 hex nut, packed with the machine, onto the 1/2-13 X 2-1/4 hex bolt. Screw the bolt into the nut welded on the table support.

3. Assemble the side table backs to the table surfaces. The extension table bolts and hex nuts are packed inside the tool kit box. Tables are installed with the clearance hole for the knife

gib adjusting screws towards the middle of the cutter. Make sure the right hand side table back plate is bolted onto the right hand side table, and the left hand side table back plate is bolted onto the left hand side table.

4. Have one person hold the assembled side table in position while the other aligns the holes and starts threading the mounting bolts with washers. (Mounting bolts are shipped installed in the side of table- remove them to install tables.)

5. Use a 9/16” socket and extension to lightly tighten the mounting bolts, then tap the extension table up or down with a rubber mallet until it is flush with the main table. Run a straight edge or sheet of paper over the seam to check the fit. Make sure your stock will not catch on the seam.

6. Locate the leveling bolt that was threaded into the welded nut on the table support in step 2. You may have to loosen the mounting bolts a little to allow enough play to level the table. When the extension tables are leveled and the surface joints even, tighten the mounting bolts securely. Make sure the 1/2-13 hex nut threaded on the leveling bolt in step 2. is tightened to prevent the leveling bolt from loosening.

7. The tables are powder coated and need only be wiped down with a dry cloth. DO NOT apply solvents or abrasive cleaners to extension table surfaces. They may cause discoloration or scratches.

5.6 Assembly: Table Out

If your cutter has been shipped “knocked down”, it is even more important to have a rigger or qualified personnel with the right equipment to position and assemble your cutter.

Your cutter will arrive in two crates. One contains the arch/base assembly. The second, a “Dutch Box”, contains the parts and accessories with the table upside down on the bottom. Reassemble as follows:

1. Remove the crate from the arch/base assembly.

2. Remove the accessories from the dutch box.

3. Lift the table out of the dutch box and turn it right side up. *NOTE:* Be careful not to damage or bend the lead screw or backgauge drive motor assembly. Use wood blocks beside the screw if straps are used (Figure 4 on page 13).

4. Remove the rear arch cover assembly.

5. Insert the table from the rear of the machine, through the arch. The table is located using two special taper pins through holes on the rear table mounting pads.

6. After locating the table, install the eight (8) table bolts. Seat the taper pins and tighten the bolts.

7. Attach the front and rear side guides. Install the table end cover. Install the rear table Plexi-glas cover to the table end cover and side guides.

8. Install the Paper Deflector. Install it through the access hole inside the front enclosure, under the table. Depress the deflector with your thumb while installing the assembly to clear the knife bar, (Figure 5 on page 6). Attach with two 3/8-16 x 1" socket head cap screws.

Figure 5

One socket screw must be installed from inside the arch. Remove the side guard plate for access. Both bolts should have shake proof lock washers.

9. Reconnect the cut button cable assembly. Route the cable through hole in the center of the electrical enclosure. Wire the power panel according to instructions found on Main Assembly sheets 10, or 11 (depending upon your model). Use pliers to snap, strain relief bushing onto cable outside power panel. Snap bushing into top of enclosure.

10. Reconnect the main power disconnect switch. Route cable through the hole in the top, right portion of the power panel enclosure. Make sure the elbow is outside the enclosure (Figure 6) and the wires pass through its nut. The nut should be on the inside of the enclosure. Wire to power panel according to instructions found on Main Assembly sheets 10 or 11 (depending upon your model). Insert the conduit elbow in the top of the enclosure and screw on its nut. Tighten the nut. Place a flat screwdriver against one of the nut's prongs and tap the screw driver with a hammer.

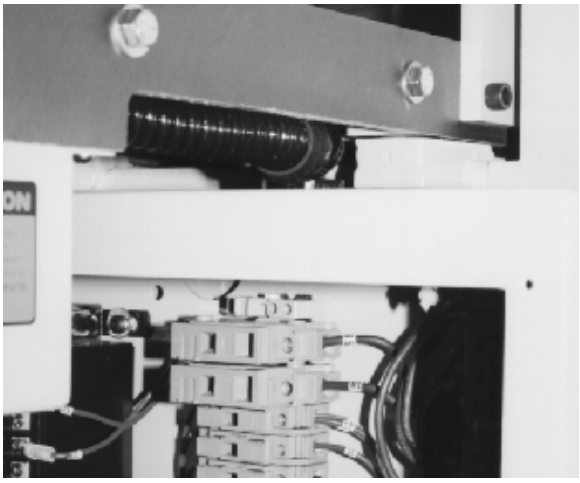

Figure 6

11. Route the encoder cable underneath the table to the encoder. Start by threading the cable from the back of the arch to above the table brace. Secure it to the table with a cable tie, (Figure 7 & Figure 8). Press the plastic cover over the encoder and the wire connection.

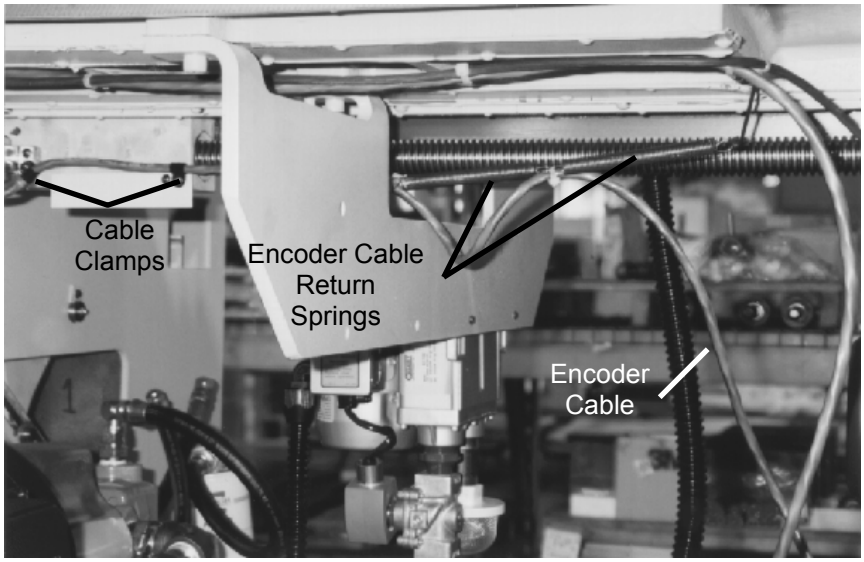

Figure 7

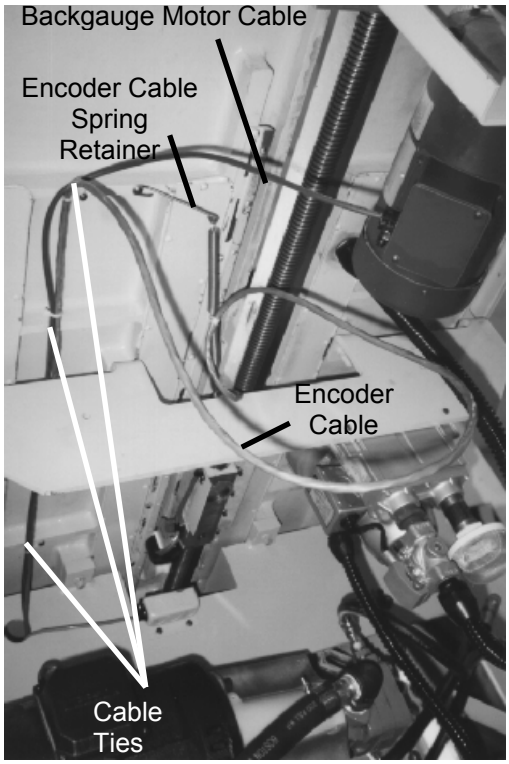

Figure 8

12. Reconnect the backgauge motor cable. From the table, the cable runs through the strain relief bushing into the motor housing, (Figure 9). Attach the wires according to the wiring schematic in the back of this manual for the machine model that you have.

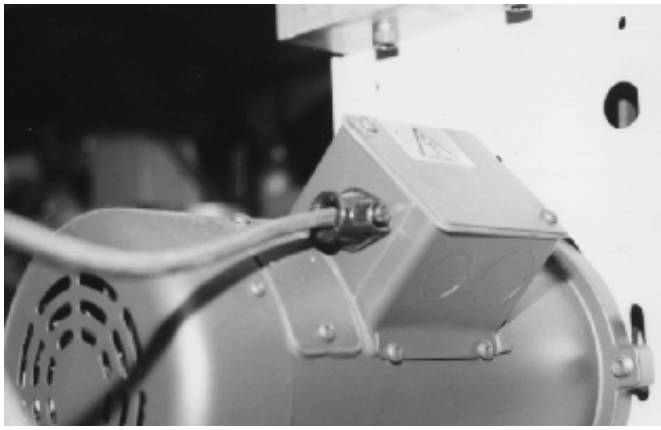

Figure 9

13. Reattach the clamp foot pedal. Adjust the nut until the cable is in slight tension.

14. Connect the tube from the blower to the plastic connector attached to the air channel cover on the bottom of the table.

5.7 Hydraulic Check

When the machine is shipped, the breather cap should be replaced with a 3/4 NPT plug. This is how the machine is shipped form the factory. Before the machine can be run for the first time the NPT plug needs to be replaced with the breather cap.

The hydraulic reservoir is filled with 15 gallons of Rykon No. 46 hydraulic oil at the factory. The fluid level should be checked before operation, and periodically during normal operation. The reservoir is located behind the cutter, beneath the table (Figure 10). The hydraulic tank has a breather cap that can be removed for changing the oil and checking the oil level. The reservoir should be kept full at all times. Fill the reservoir so that the oil level is 3/4” below the top of the inside of the hydraulic tank.

NOTE: DO NOT OVERFILL. Overfilling may cause leakage when the machine is hot.

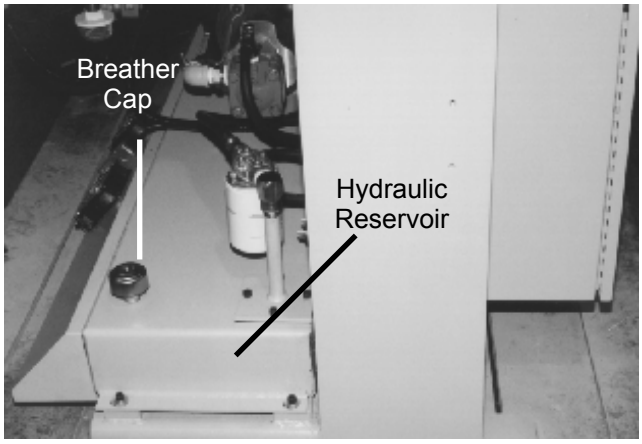

Figure 10

5.8 Power Hook-Up

CAUTION **SHOCK HAZARD! Always disconnect power at main power panel before working on the cutter. Lock it out to prevent accidental power up. See Power Lockout Procedure (page 6).**

For satisfactory operation, be sure that your cutter is wired for the correct phase and voltage and has adequate power. The correct electrical specifications for your machine are shown on the serial plate. Check the machine serial plate before connecting the power. For future reference, transfer this information to the front cover of this manual.

Watch Setup Voltage- Inadequate power to the cutter can be a major source of problems. Too many machines on the same circuit will reduce the power to each machine. Inadequate voltage will frequently cause overheating, loss of power, and in extreme cases, failure to operate. Test your voltage when the shop is at actual working levels. Challenge recommends a dedicated line with a lockable disconnect to provide adequate power for this machine.

Important: You must have an adequate size circuit and heavy enough wiring for this machine. The circuit size should be a minimum of 20% greater than the amperage rating on the machine nameplate. If a wire is run over 75 feet (23 meters), the next size wire should be used. Check local electrical codes.

Electrical Specifications for Champion 370 Cutter

	Volts	Amps	Circuit Size	Wire Size	Metric Wire
3 Phase:	460 V	11.5	16.5 A	#12 AWG	4mm sq.
	230	25	38	#8	10mm sq.
	208	25	38	#8	10mm sq.

5.9 Three Phase Hook-Up

The power source is connected to the cutter through the bottom of the power panel (right hand side). A main power control switch and power cord providing the machine with power is the responsibility of the customer and should be set in accordance with the local electrical code.

1. *DISCONNECT AND LOCK OUT THE POWER* (See Power Lockout procedure, page 6)
2. Thread the power cord through a conduit connector into the power panel.
3. Fasten the ground lead to the ground terminal lug (Figure 11 on page 19).

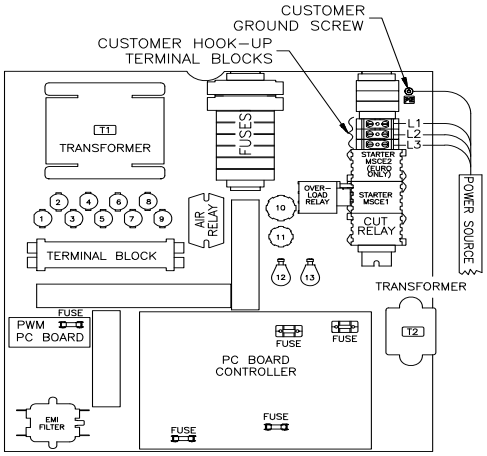

Figure 11

4. Fasten the three power leads to the three terminals of the main power terminal block- L1, L2, & L3.

5. Close the electrical panel doors and latch them. Unlock the main panel and turn on the power. Turn on the main power disconnect switch located on the front face of the table.

6. Press both cut buttons simultaneously to activate the motor and check to make sure it is turning the same direction as the arrow on the motor casing.

If it isn't, disconnect the power and simply exchange any two leads (L1, L2 or L3 in Figure 12) of the power cord as in Figure 12. The motor will now turn the correct direction. Double check to make sure.

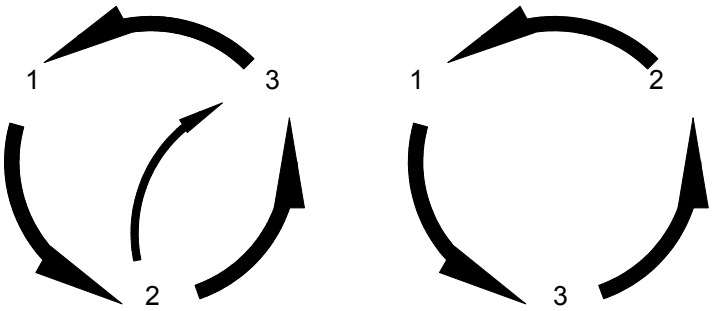

Figure 12

NOTE: DO NOT ATTEMPT TO OPERATE THE CUTTER UNTIL THE REST OF THIS MANUAL HAS BEEN THOROUGHLY READ AND UNDERSTOOD. CALL YOUR DEALER IF YOU STILL HAVE ANY QUESTIONS.

6.0 Operation

IMPORTANT: DO NOT ATTEMPT TO OPERATE THE CUTTER UNTIL YOU HAVE THOROUGHLY READ AND UNDERSTAND ALL OF THE FOLLOWING INSTRUCTIONS. CALL YOUR AUTHORIZED CHALLENGE DEALER IF YOU STILL HAVE ANY QUESTIONS.

6.1 Power - Main Power Switch

Power is brought to the machine when the main power switch is turned to the “ON” position (Figure 13). The display, table light and line lights are turned on at this time.

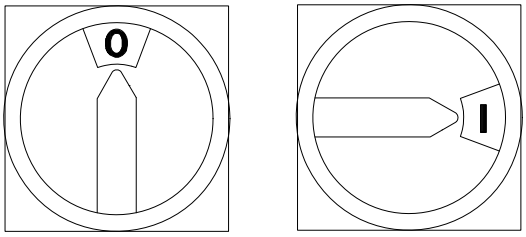

OFF ON

Figure 13

The screen saver will activate and the line lights will shut off after 5 minutes without any activity. This shut-off time can be changed in the Parameters screen of the Maintenance Mode (see the Parameters/Time Out section on page 27). To restore power to the display and line lights, press any button on the keyboard.

6.2 Start Up

Once power has been turned on, the display will show the following:

When the CLEAR key is pressed, the backgauge will move to coordinate the true position into the computer (if the knife and clamp are not in the “up” position, the display will prompt the operator to raise them by pressing the cut buttons prior to presetting the backgauge). When finished, the machine will be in “Send Mode” and the display will appear similar to the display shown below.

The backgauge may now be sent to a desired position by simply typing the dimension and pressing SEND (see the Send Mode section on page 25).

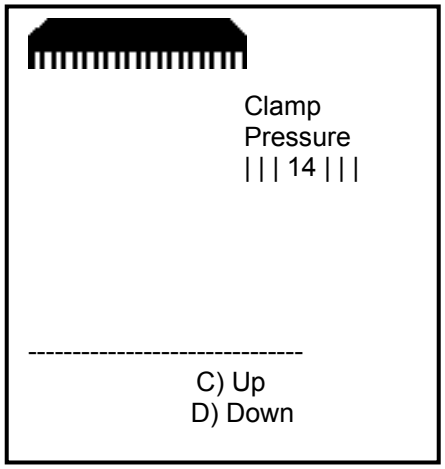

6.3 Making a Cut

Place the paper against the backgauge and side guide. Press and release both cut buttons once to start the hydraulic motor. Then press and hold both cut buttons to start the cut cycle. While holding the cut buttons, the knife and clamp will complete the cut cycle. If either button is released at any time during the cycle, the knife and clamp will immediately return to the up position.

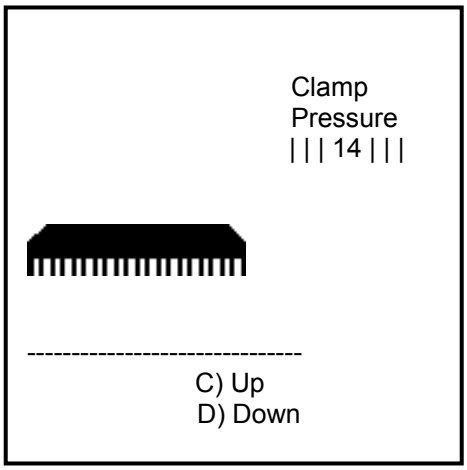

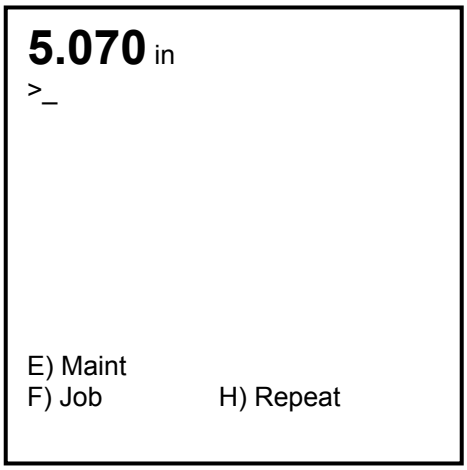

Note: Both cut buttons must be released before a new cut can be made. The cut buttons must be pressed within 0.5 seconds of each other in order to make a cut.

⚠ CAUTION DO NOT ATTEMPT TO REMOVE TRIM FROM TABLE SURFACE, CLAMP FACE OR KNIFE BLADE UNTIL THE KNIFE AND CLAMP HAVE STOPPED IN THE UP POSITION! DO NOT USE FINGERS OR HANDS TO REMOVE TRIM FROM CLAMP FACE OR KNIFE BLADE! Due to static buildup, fine trim may have a tendency to stick to the clamp or knife surfaces. Fingertips might be drawn into the knife by the clamp if this is attempted. Wait until the knife and clamp have BOTH STOPPED MOVING before removing stock trim.

6.3.1 Shutting Off the Hydraulic Motor

The hydraulic motor can be shut off at any time by pressing soft-key “B” (Mtr Off) or by holding only one of the cut buttons for 3 seconds. The hydraulic motor will also shut off when the screen saver is activated. This shut-off time can be changed in the Parameters screen of the Maintenance Mode (see the Parameters/Time Out section on page 27).

6.4 Jogging Aid

All Champion cutters include a jogging aid as standard equipment. The jogging aid allows the operator to load and align stock without placing hands or arms under the clamp and knife area.

Load and align the paper against the side guide, (Figure 14 on page 22), then square it to the backgauge for cutting.

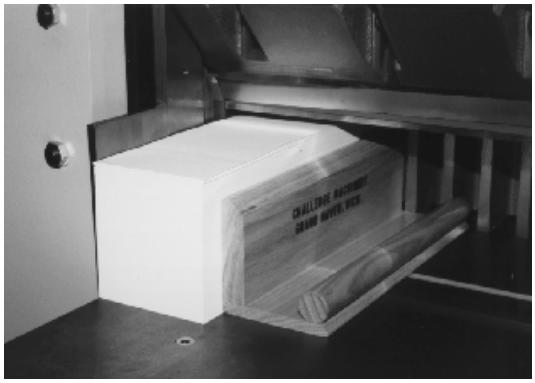

Figure 14

Additional jogging aids can be purchased by contacting your authorized Challenge dealer. (P/N A-12608-6)

CAUTION **Always remove the jogging aid from the table before making a cut.**

6.5 Clamp Pressure Adjustment

The clamp pressure can be adjusted by pressing soft-key “C” (Up) to increase the pressure, and soft-key “D” (Down) to decrease the pressure. The pressure scale ranges from 0 to 15, 15 being the maximum.

6.6 Manual Clamping

All Champion cutters are equipped with a manual clamping feature which allows the operator to manually clamp paper before beginning the cut cycle. To use this feature, press down on the foot pedal until the clamp comes down on the paper. While holding the pedal down, press the cut buttons. Release the pedal once the cut has been completed.

6.7 Knife Change Alarm and Lubrication Alarm

The Champion 370 XG has two built in alarms that will be displayed after a certain number of cuts. The knife alarm displays a message to remind the operator to change the knife. The lube alarm displays a message to remind the operator to have the machine lubricated. The lube alarm will also display the name and phone number of the Challenge dealer from which the machine was purchased. To reset either alarm, or to change the knife alarm value, see the Knife Count section on page 28. The lube alarm value is factory set at 2,500 cuts and cannot be changed.

6.8 Definition of Keys

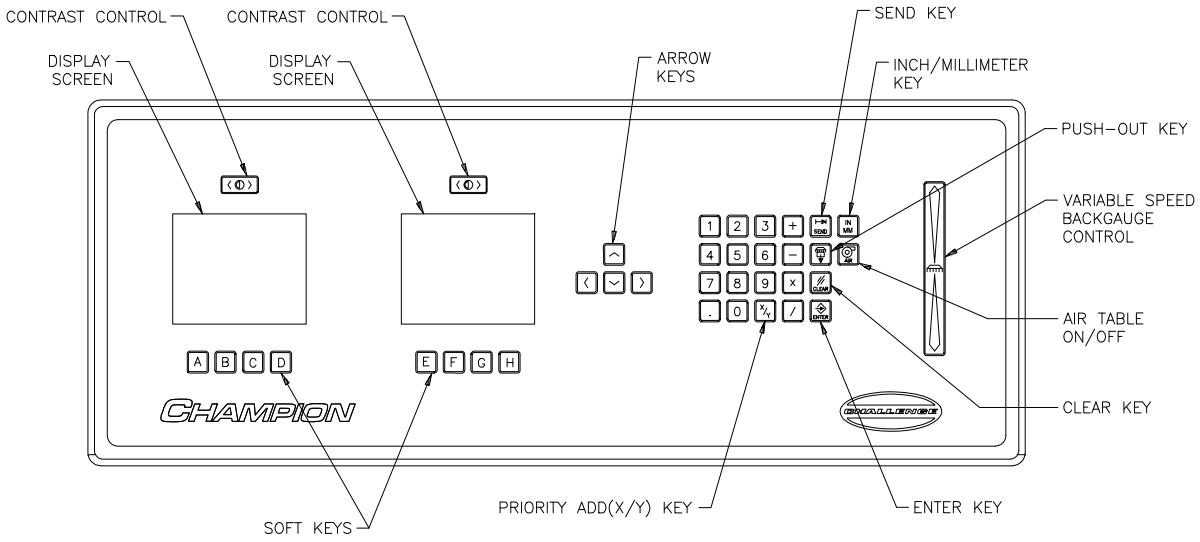

Figure 15

6.8.1 Backgauge Glide Control

The backgauge glide control is used to manually position the backgauge. The speed of the backgauge will depend upon where the actuator is pressed. Press farther from center for a faster speed, and closer to center for a slower speed. To move the backgauge forward, press downward. To move the backgauge backward, press upward. Pressing the center displays true position.

6.8.2 IN/MM Key

This key toggles the display to show the position and programmed send values in inches (e.g. 5.250), inch fractions to the nearest 1/64” (e.g. 5_$^{1}/_{4}$), or millimeters (e.g. 133.3).

6.8.3 Air Table ON/OFF Key

This key turns the air table on and off.

6.8.4 SEND Key

The SEND key is used to send the backgauge to any valid position. If an attempt is made to send the backgauge to an illegal position, an error message will be displayed at the bottom of the screen stating “Number outside limit”. In the Job mode, the SEND key will also advance the backgauge to the next sequential cut position before performing the cut.

6.8.5 Push-Out Key

The push-out key will move the backgauge forward 5 inches (or to the most forward position) and then return it to its previous position. This allows paper to be removed from the cutter without putting hands under the knife and clamp.

CAUTION **Never place hands in the clamp and knife area.** Use the push-out key or the backgauge glide control to move the paper to an area where it can be reached.

6.8.6 Clear Key

The CLEAR key is used to clear error messages and the current entry line.

6.8.7 Enter Key

The ENTER key selects items in the maintenance mode and processes data that has been entered in the other modes.

6.8.8 Priority Add (X/Y) Key

The priority add key is used for entering fractions when they are combined with whole numbers. The symbol displayed when this key is pressed is the underline symbol “_”. An example of a number entered using the priority add key is 1_1/2.

6.8.9 Soft-Keys

There are a total of four soft-keys labeled “A” through “D”. The functions of these keys change depending on the operating mode. The function of each key can be found on the bottom of the display screens.

6.8.10 Arrow Keys

The four arrow keys can be used in almost all screens. The arrow keys are primarily used for moving the cursor around on the screen, or to toggle between highlighted selections. In some screens, the left arrow key acts as a backspace key.

6.8.11 Contrast Control

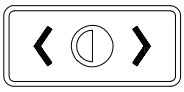

The contrast of each display screen can be adjusted by using the contrast control buttons located directly above each display screen.

6.9 Manual Backgauge Control

6.9.1 Backgauge Glide Control

The backgauge can be moved manually by use of the backgauge glide control. Press towards the operator for forward travel and away from the operator for reverse travel. The further away from center that the actuator is pushed, the faster the backgauge will travel.

6.9.2 Backlash Indicator

To insure accurate cuts, the backgauge must be brought to the cut position from the rear of the table. In the display, to the right of the backgauge position, there is a small arrow to indicate reverse travel. This arrow should be off when making a cut. Moving back past your cut position, then forward to it, compensates for any play in the backgauge nut and leadscrew.

6.10 Send Mode

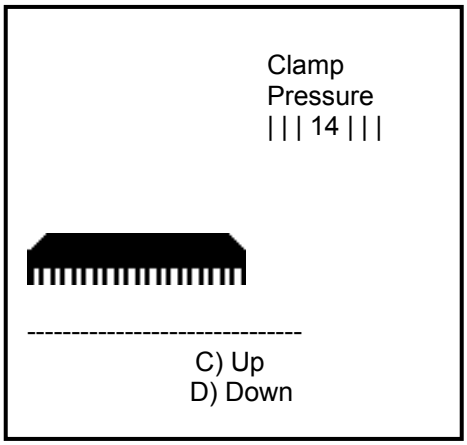

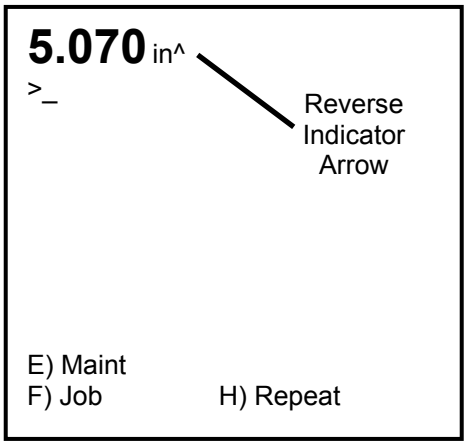

The send mode is the first screen displayed after the backgauge is preset. From this screen the backgauge can be positioned with the backgauge pinpoint control or by entering a value and pressing the SEND key. A mathematical expression can also be entered as a send value. Simply type the expression and press SEND. You can also enter an equation which begins with the current backgauge position. For example, if you want to send the backgauge 2” forward from its current position, just press [-] [2] and SEND.

The send mode screen can also be used for doing math calculations that are larger than the backgauge's reverse limit. In this case, you must press ENTER to have the result displayed on the screen.

6.10.1 Entering Math

In the simple send mode, the Champion XG is capable of calculating an entire math string such as, 10-5+5x6+2_3/4. However, the result is limited to 29999.000 and the result cannot be a negative value. In the job mode, and during a send, the result of the calculation must be less than the backgauge limit of 30.500 inches.

6.10.2 Entering Fractions

Fractions are entered with the priority add key X/Y. The symbol displayed when this key is pressed is the underline symbol "_". This instructs the computer to add the fractional portion of the entry before performing the remaining math. This key is useful when entering a formula as follows: 3x2_3/4 = 8_1/4. If a simple plus had been used instead, the result would be as follows: 3x2+3/4 = 6_3/4.

6.11 Repeat Mode

This mode allows the operator to make a series of cuts during which the backgauge moves a specified distance between each cut. To enter repeat mode, press soft-key "H" (Repeat). The display will then look like the one below:

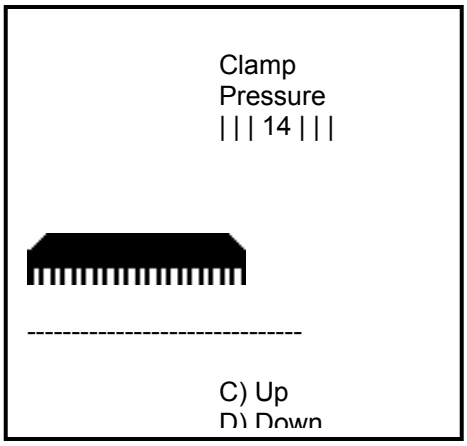

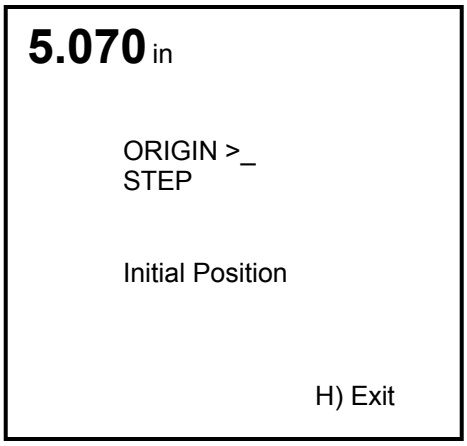

Type in the desired initial backgauge position and press ENTER. The backgauge will then move to that position. Then type in the step value and press ENTER. Position the paper and make a cut. The backgauge will then move forward by the step amount, and a new cut can be made. When finished, press soft-key "H" (Exit) to exit back to send mode.

6.12 Maintenance Mode

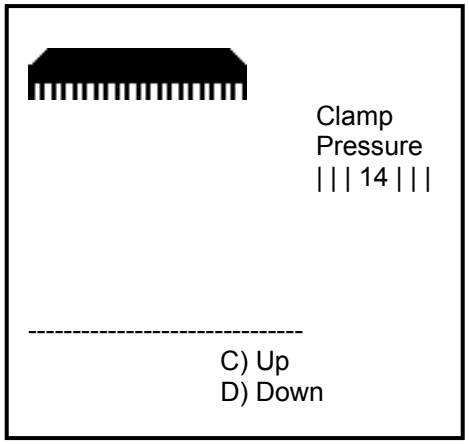

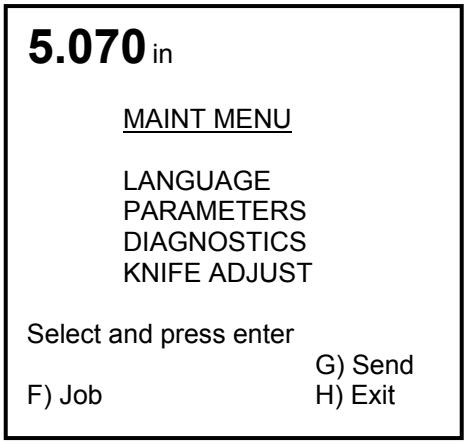

The maintenance mode is an area where many machine functions can be set or modified. The four principle functions are: Language, Parameters, Diagnostic, and Knife Adjust. To select a particular function, use the up and down arrow keys to toggle to the desired function and press ENTER. See the following descriptions for an explanation of each function.

6.12.1 Language

In the language screen, use the up and down arrow keys to toggle to the desired language, and press ENTER. All messages will be displayed in the selected language.

6.12.2 Parameters

In the parameter screen, use the up and down arrow keys to toggle to the desired parameter, and press ENTER. See the descriptions that follow for an explanation of each parameter.

6.12.2.1 False Clamp

The false clamp plate is an optional attachment, which reduces the creasing of paper caused by the clamp. The disadvantage of using the false clamp plate is that it limits the smallest cut dimension. **The computer must know when the false clamp plate is installed on the machine to prevent the backgauge from crashing into it.** In the false clamp screen, use the up and down arrow keys to toggle between ON or OFF to indicate the presence of the false clamp plate, and press ENTER.

6.12.2.2 Time-out

This parameter sets the amount of idle time for which the screen saver activates and the line lights and hydraulic motor turn off. The choices are 2, 5, 10, 20, and 30 minutes. In the time-out screen, use the up and down arrow keys to toggle to the desired time-out, and press ENTER.

6.12.2.3 Push-out

Normally, whenever the backgauge is sent to a larger dimension, a five-inch (127mm) push-out is performed to aid the operator in accessing the paper. In some situations, it may be necessary to turn this feature off. It is recommended that this feature be left on whenever possible. In the push-out screen, use the up and down arrow keys to toggle to the on or off status as desired, and press ENTER.

6.12.2.4 Accuracy Adjust

This parameter provides a means for adjusting the accuracy of the backgauge. To change the accuracy, send the backgauge to 2 inches (50.8mm) and cut some paper. Measure the paper, and type in what you actually measure. The computer will calculate the amount of error and will compensate. A value may also be added to or subtracted from the current value.

6.12.2.5 Knife Count

The knife count parameter allows the operator to reset the knife alarm and the lube alarm. The knife alarm displays a message to remind the operator to change the knife. The lube alarm displays a message to remind the operator to have the machine lubricated. The lube alarm will also display the name and phone number of the Challenge dealer from which the machine was purchased.

There are three functions within the knife count parameter: Clear Count, Knife Alarm, and Clear Lube. Select the desired function and press ENTER. See the following descriptions for an explanation of each function.

Select **Clear count** to reset the knife counter when a knife change has been performed.

Select **Knife Alarm** to enter or change the knife stroke alarm value. When this value is reached, the display will alert you to change the knife and reset the knife counter. Knife alarm values for the Champion XG are factory set at 2,500 cuts. However, you may want to change this value based on your specific machine applications. See the Knife section for help in choosing a knife alarm value for your machine.

Select **Clear lube** to reset the lube alarm after performing the lubrication requirements as shown in the Lubrication section of this manual. NOTE: The alarm will activate after 2,500 cuts. This value is set at the factory and cannot be changed.

6.12.2.6 Machine count

The number displayed is the total number of cuts made by the machine.

6.12.3 Diagnostic

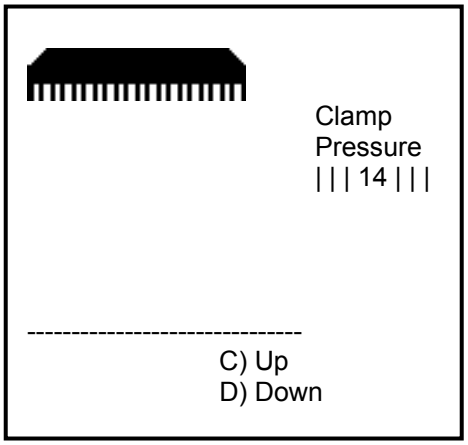

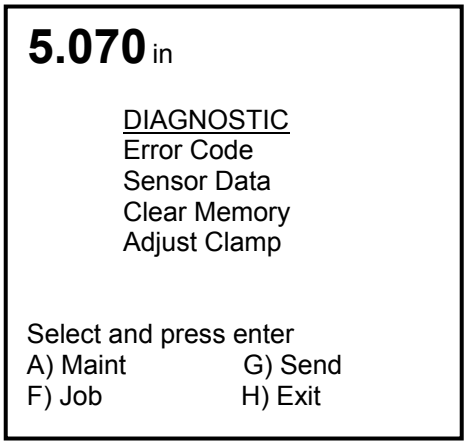

The diagnostic area can be very helpful in locating a problem in the event of a machine malfunction. Use the up and down arrow keys to toggle to the desired selection, and press ENTER. See the following descriptions for an explanation of each.

6.12.3.1 Error Code

The Error Code function simply recalls the last five error messages that were displayed. This can be very useful in cases when the malfunction cannot be reproduced in the presence of the service technician.

6.12.3.2 Sensor Data

The Sensor Data function provides a list of computer inputs and outputs (proximity switches, etc.) along with their status (0 for open, 1 for closed). This function allows a service technician to check the status of a switch without removing any covers. Cuts and backgauge movements are allowed in this screen so that the technician may observe the status of the inputs and outputs during machine operation.

6.12.3.3 Clear Memory

The Clear Memory function resets the memory to a known state. **All cut positions will be erased during this operation**.

6.12.3.4 Knife Adjust

The knife adjust function provides a way for the service technician to change the knife. In the Knife Adjust screen, use the up and down arrow keys to toggle to the up or down status as desired, and press ENTER. Press and hold the cut buttons to send the knife to the desired position.

6.13 Job Mode

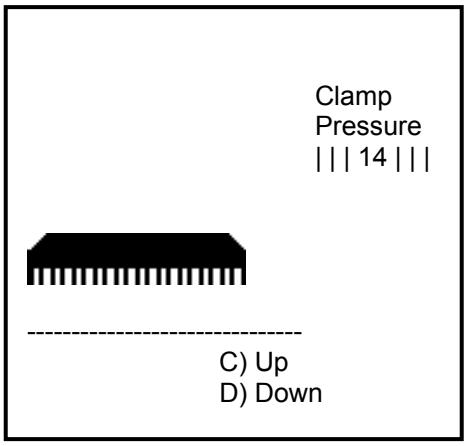

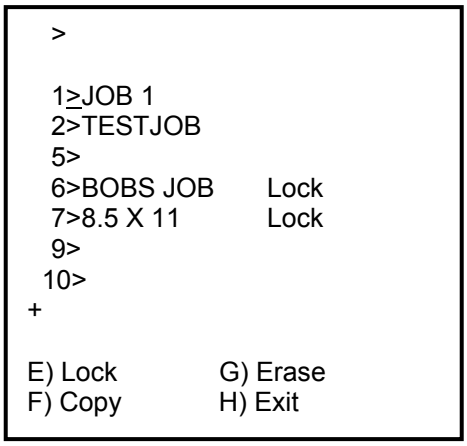

The Champion XG can be programmed for up to 99 different jobs. A job is a sequence of programmed cut positions. The backgauge moves to each position after a cut cycle is made. Each job can hold up to 99 send values. Job mode is entered by pressing soft-key “F”. When the job mode is entered, all previously programmed jobs will be displayed along with their name and lock status. Locked jobs display the word “Lock” after their name. A plus “+” sign at the bottom of the screen indicates there are more jobs programmed than what are displayed. Pressing the left arrow key and the down arrow key simultaneously will page down to the next set of jobs. Page 35 contains an example of how to program a job.

6.13.1 Lock/Unlocking a Job

In the Job Mode screen, the soft-key “E” will display “Lock” or “Unlock” depending on the current status of the job. If a job is locked, the word “Lock” will be displayed to the right of the job name.

Locking a job prevents it from being edited. To change the lock status of a job, simply move the cursor to the desired job using the up and down arrow keys, and press the soft-key “E” (Lock/Unlock).

6.13.2 Copying a Job

First, select a job to copy by moving the cursor up or down to the desired job number and press the soft-key “F” (Copy). “Select Copy to #” will be displayed at the bottom of the screen. Enter a job number for the new job or move the cursor to an existing job and press ENTER. If the new job is locked, the copy will not be allowed. NOTE: if the new job is not locked, but contains data, the old data WILL BE LOST.

6.13.3 Erasing a Job

Select a job to erase by moving the cursor to the desired job. Press the soft-key “G” (Erase). “Clear channel #” will be displayed, followed by YES or NO. Use the up and down arrow keys to toggle to YES or NO. YES will erase the job, NO will leave the job unchanged. NOTE: locked jobs cannot be erased.

6.13.4 Creating a New Job

To create a new job, type in a number that is not already assigned to a job and press ENTER (entering a job number greater than 99 will create job #99). The cursor will move to the line corresponding to the number you typed in, prompting you for a job name. If no job name is desired, simply press ENTER again to begin entering send values (see below). To name the job, press the right arrow key to move the cursor to the first character position. Enter a character of the alphabet by using the up and down arrow keys to toggle to the desired character. The numeric keys can be used to enter numbers directly into the job name. When the desired character is in place, use the right arrow key to move to the next character position. The job name can be up to 10 characters long. A letter can be removed from the job name by moving the cursor to the undesired character and pressing the CLEAR key. When finished, press ENTER to save the name and to begin entering send values. The screen should now look similar to the one below:

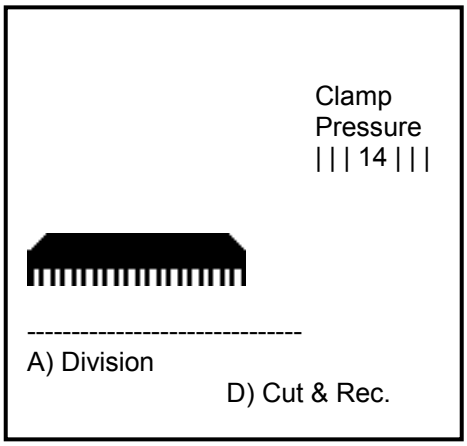

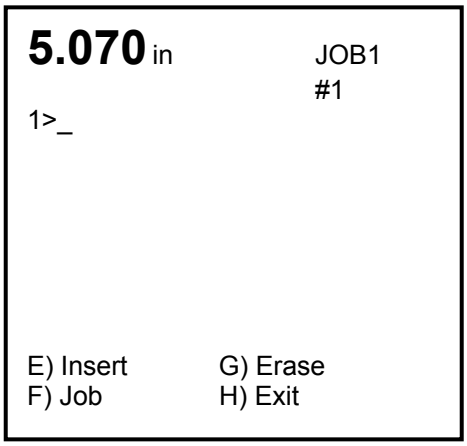

6.13.4.1 Entering Send Value

Send values can now be entered by using any of the following methods: 1) Type in the desired value and press ENTER, 2) Press ENTER at a blank line - this will enter the current position of the backgauge as a send value, 3) Use the “Cut and Record” feature (described later) or 4) Use the “Sheet Division” feature.

6.13.4.2 Creating a Stock Loading Position

After typing a send value, pressing the right arrow key instead of ENTER will move the cursor to the right and prompt the operator to enter a rotation indicator mark or Load Zone (LZ). Selecting LZ will make it impossible to cut at that position. Pressing both cut buttons on a position marked at a Loading Zone will prompt the backguage to move to the next position in the job. Using a loading position eliminates the need to reach into the knife/clamp area of the cutter when loading a job.

6.13.4.3 Entering Rotation Mark

After typing in a send value, pressing the right arrow key instead of ENTER will move the cursor to the right and prompt the operator to enter a rotation indicator mark. The display will look similar to the one shown below:

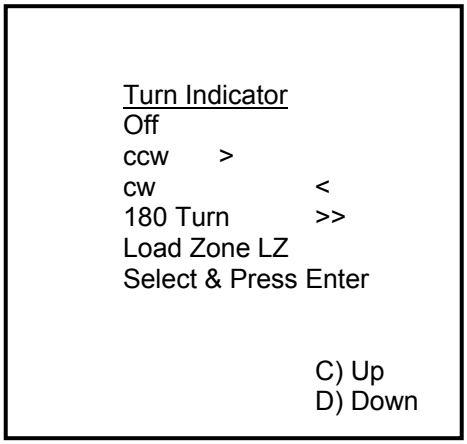

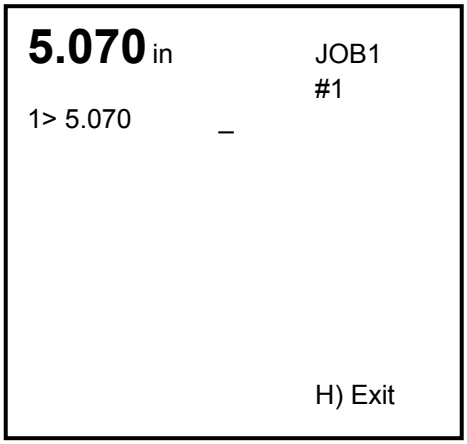

Use soft-keys “C” and “D” to choose a turn indicator. Pressing ENTER will place an indicator mark to the right of the send value, as shown below:

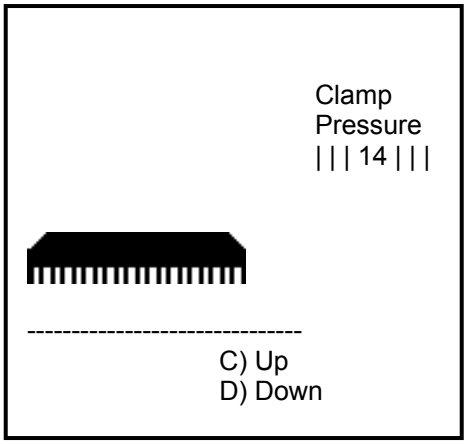

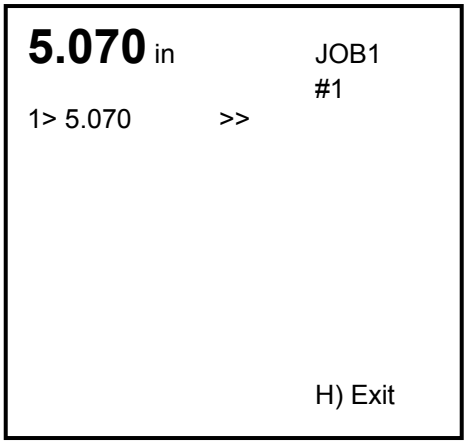

When the desired indicator mark is in place, press the right arrow key. The cursor will move to the right and prompt the operator to enter a clamp pressure (see the following section).

NOTE: All new entry lines will have the same turn indicator mark as the one above it, until it is changed.

6.13.4.4 Entering the Clamp Pressure

A separate clamp pressure can be entered for each cut in a job. To enter the desired clamp pressure, first enter the desired send value (described above), then press the right arrow key and enter the rotation mark if necessary (described above), then press the right arrow key again to move the cursor to where the clamp pressure can be entered. Use soft-keys “C” and “D” to increase or decrease the clamp pressure, or use the numeric keypad to enter a number from 0 to 15 (see Adjusting the Clamp Pressure section, page 22 for information about the clamp pressure setting). This will complete the entry for the current line and move the cursor to the send value of the next line.

NOTE: All new entry lines will have the same clamp pressure as the one above it, until it is changed.

6.13.4.5 Cut and Record

To use this feature when creating a new job, simply send the backgauge to a desired position using the backgauge glide control or by using SEND, then make a cut. The current backgauge position will automatically be displayed in the next available cut location and the operator will be prompted to press ENTER to record the current value. If ENTER is not pressed, the value will not be recorded into the job as a send value. This can be very convenient for setting up a program when the actual cut positions are not known.

6.13.4.6 Sheet Division Feature

The Champion XG has a sheet division feature that automatically creates a complete set of send values using the parent and finished sheet sizes specified by the user. Since this feature creates an entire set of send values, it is best to use it only when creating a new job. However, this feature can also be used when editing or using an existing job. It will simply insert the new set of send values after the current send value.

Begin by pressing soft-key “A” (Division). The display will be similar to the following:

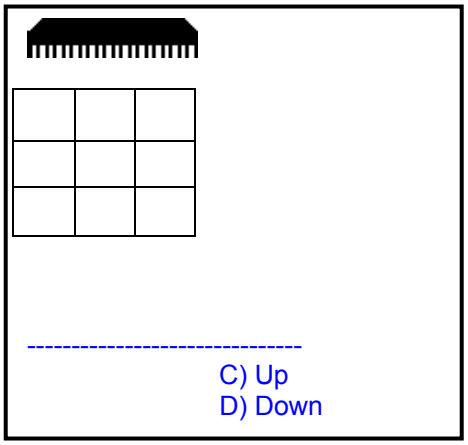

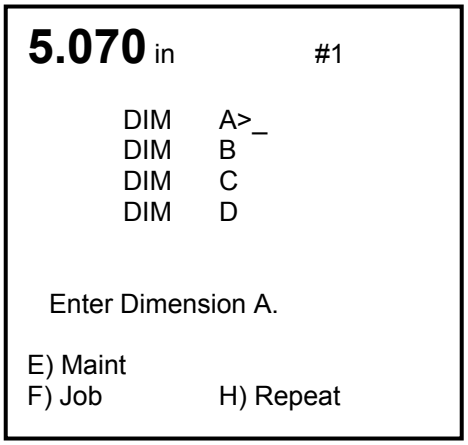

The program guides the operator through the steps of entering the necessary dimensions. Then the program asks if the columns are to be cut separate (as opposed to stacking the columns and cutting them all at once). Press “1” for Yes and “0” for No. The display will now look similar to the one shown next (it may vary based on the input):

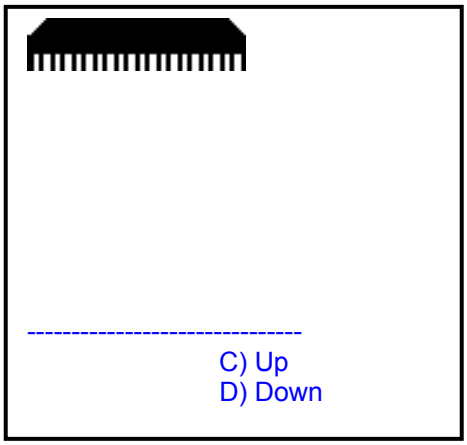

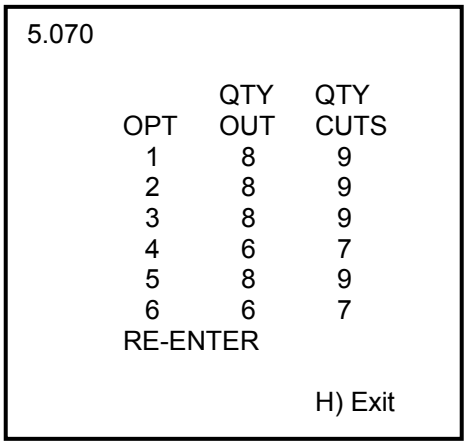

Use the up and down arrow keys to scroll through the possible layouts. The left display will show each choice visually. Select the desired layout by pressing ENTER. At this point the send values will be automatically calculated and entered, and the job will be complete and ready for use. To make changes, edit the job as described in the “Editing a Job” section below.

6.13.4.7 When Finished

When finished entering send values you may exit the current job by pressing soft-key “B” (Job) to go back to the job mode screen or soft-key “D” (Exit) to exit to send mode. Or you may use the current job for cutting by pressing the down arrow at the last line and following the instructions in the “Running a Job” section (page 34).

6.13.5 Editing an Existing Job

6.13.5.1 Editing the Job Name

The job name can be edited (or added if an existing job does not have a name) in the job mode screen. To edit the name, move the cursor down to the desired job number by pressing the down arrow key. Then press the right arrow key to move the cursor to the desired character position and edit the character by pressing the up or down arrow keys to toggle between characters of the alphabet. Numbers can be entered directly by using the number keys. Pressing CLEAR clears the current character. When finished, you may either go to the current job by pressing ENTER, or go to a different job, or exit job mode.

6.13.5.2 Editing Send Values

To edit send values of an existing job, start by opening the desired job from the job mode screen. A job is opened by one of two methods: pointing at the desired job with the cursor and pressing ENTER, or by entering the job number with the keypad and pressing ENTER. Once a job has been opened, the current job number will be displayed in the upper right corner. NOTE: If the job is locked, it cannot be edited.

Send values can now be edited by moving the cursor up or down to the desired send value and then typing over the existing value. To page up and page down, press the left and down arrow keys simultaneously.

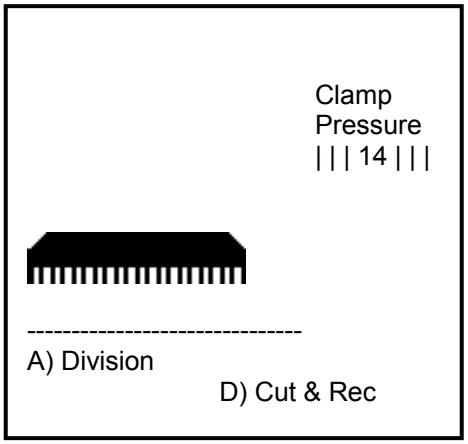

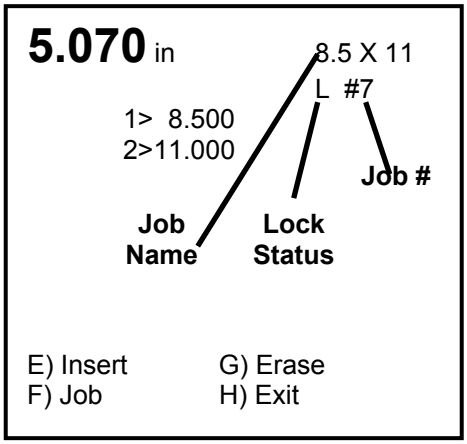

To insert a send value, press the soft-key “E” (Insert). This moves all send values down and provides a blank line after the current send value.

Send values can also be entered using the “Cut and Record” feature. Move the cursor to the line where the send values are to be inserted. Then press soft-key “D” (Cut & Rec). “C & R” will appear in the upper right corner of the left display. Each cut will add the current backgauge position as a send value. When finished, press soft-key “D” (Cut & Rec) again to exit cut & record mode. If there is a blank line where the cursor is, press the down arrow and it will disappear.

To erase a send value, press the soft-key “G” (Erase). This will remove the cut value currently being pointed to by the cursor. To backspace over the current send value without removing the line, press the left arrow key.

When finished editing the job, you may exit the current job by pressing soft-key “F” (Job) to go back to the job mode screen or soft-key “H” (Exit) to exit to send mode. Or you may use the job for cutting since it is already open.

6.13.6 Running a Programmed Job

To use an existing job for cutting, you must first open it by using one of two methods: move the cursor to the desired job with the arrow keys and press ENTER, or enter the job number with the keypad and press ENTER. Once a job has been opened, the current job name and number will be displayed in the upper right corner. Now press SEND to move the backgauge to the first programmed position (or send value). Make a cut by pressing both cut buttons. Once the cut is made, the backgauge will automatically push out the paper (only if the next position is larger than the current one, and if “push-out” is enabled) and move to the next programmed position. If the job was created using the “Sheet Division” feature, the left screen will display a diagram of where to place the paper for each cut. After the last cut in the job is made, the backgauge will move to the first cut position of the current job. Pressing SEND at any time during the job will send the backgauge to its next programmed position without making a cut. A plus “+” sign will be displayed at the bottom of the screen if more cuts remain in the current job.

6.13.7 Exiting a Job

To exit an open job, press the soft-key “F” (Job) to return to the job mode screen, or press the soft-key “H” (Exit) to exit to the send mode screen.

6.14 An Example Job – XG Model

The following is an example of how to program a job which will be used to make two cuts: one at 8.5” and one at 11”.

1. Turn on the machine and press CLEAR to preset the backgauge. Press the soft-key “F” (Job) to go to job mode.

2. Type in an unused job number and press ENTER. Note: It must be a number that does not correspond to an existing job. All existing jobs will be displayed on the screen (you may have to scroll through them to see them all). If you wish to replace an existing job with the new job, first erase the existing job by moving the cursor to it and press the soft-key “G” (Erase). Now type in the new number and press ENTER. In this example, job #’s 1, 2, 5, and 6 already exist. We will use job # 7 for our new job. Press “7” and ENTER.

3. The cursor will move down to the new job number. At this point, press the right arrow key once to move the cursor to the first character position. Now name the job “8.5 X 11”. To do this, press “8” on the number keypad. Then press the decimal “.” key and so on. To enter the spaces and the letter “X”, use the up and down arrow keys to toggle through the alphabet and press the right arrow key to move to the next character position.

   Now press ENTER to begin programming the job.

4. To enter the first send value of 8.5”, simply type in 8.5 and press ENTER. The cursor will move to the second line. Now type 11 and press enter. At this point, you could exit and save the job by pressing the soft-key “H” (Exit) to exit to send mode, or the soft-key “F” (Job) to exit back to the job mode screen. However, lets use this job to cut paper.

5. Press the down arrow key once. This will remove the blank line 3 and move the cursor to the first send value (8.5”). Now press SEND. The backgauge will move to the 8.5” position. Place the paper to be cut against the backgauge and press the cut buttons. Once the cut cycle is complete, the backgauge will push out the paper and move to the next send value (11”). Now position the paper again and make another cut. After the cut is made, the backgauge will push out the stock and return to the first cut position, ready to repeat the current job.

6. Now lets lock the current job so it cannot be edited. First, exit back to job mode by pressing soft-key “F” (Job). Now move the cursor down to the new job using the down arrow key. Now press the soft-key “E” (Lock) to lock the job. A lock symbol will appear indicating the job has been locked.

7. To exit back to send mode, press the soft-key “H” (Exit).

7.0 Operating Tips

- Use a jogging aid to align stock. This will reduce the chance of an accident by not having to reach under the knife or clamp. Likewise, use the backgauge to push out stock before removal.
- Never attempt to remove paper trim clinging to the blade or clamp until they have stopped moving!
- Carefully lay out each sheet before you start cutting. Find the best-cut pattern to give you the most pieces out of the sheet. If the sheet will be folded, be sure the grain of the paper is running in the same direction as the fold or you will get a rough edge on the fold.
- If an accurate cut is necessary for close register work, you MUST have a sharp blade in the cutter. A dull blade will pull or draw the stock and cause uneven cutting. See Knives section, below.
- Clamp pressure should not be increased to eliminate draw without first checking for knife sharpness. Draw from a dull knife can only be eliminated by installing a sharp knife. See Knives section, below.
- Appropriate clamp pressure will vary from one stock to another. As a rule, you should have enough pressure to securely hold the stock but not so much that the stock is unacceptably deformed. Excessive clamp pressure causes pile distortion and inaccurate cutting.
- To make stock slide as easily as possible on the cutter table, wash the table with non-offset powder or with a silicone/rust preventative.
- Mark the gripper edge and the guide edge of printed stock and make sure the first cuts are with these guide edges against the backgauge.
- Measure printed stock to check for shrinkage or expansion of the paper from humidity. You may have to disregard the printed cut lines and make your own.

8.0 Routine Maintenance/Adjustments

8.1 Knife Care

⚠ CAUTION **CAUTION: ! KNIFE SAFETY !** Knives are **DANGEROUS!!!** They are heavy and very sharp, even after use. Keep the edge away from your body and keep the area clear of others when handling knives. Never touch the cutting edge! To prevent personal injury and damage to the knife, always keep knives in their holders with screws tightened. You are aware of the dangers, but others may not be. Never attempt to hone, polish, or service the knife in any way. Failure to follow safety procedures may result in severe lacerations or dismemberment.

- Make sure knife lifters are properly installed, see instructions following.
- Keep handling of unprotected knives to an absolute minimum.
- Clear off cutter table before removing knife.
- Have scabbard on cutter table and insert knife immediately.
- Warn people of any unprotected knife.
- Knife changing is a **ONE PERSON OPERATION**. Having more than one person trying to change knives invites accidents.

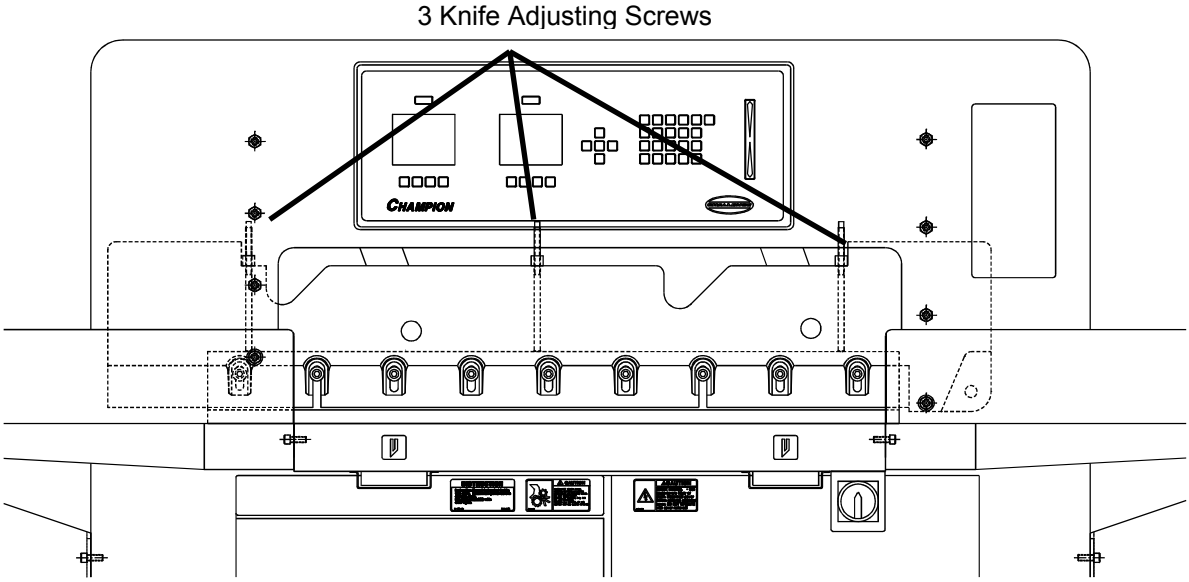

Figure 16

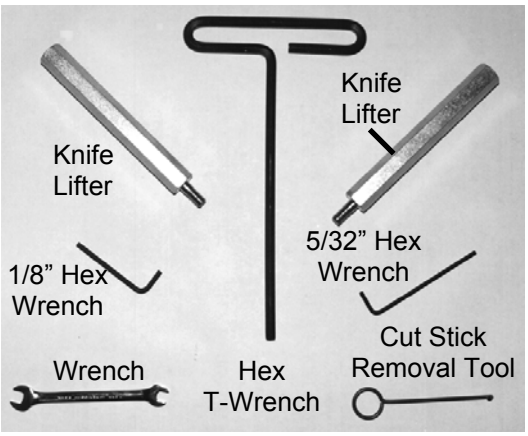

Figure 17 – Knife Changing Equipment

8.1.1 Changing the Knife

The knife changing equipment shown in Figure 17 is included in the cutter tool kit. The following instructions show how to remove and install a new or re-sharpened knife. Read through these instructions AT LEAST ONCE before attempting to actually change or install any blades.

8.1.1.1 Knife Removal

1. Clear the cutter table. Place chipboard directly under the knife to prevent nicking if the blade hits the table.

2. Lower the knife bar. See section 6.12.3.4 Knife Adjust on page 29 for directions on how to lower the knife bar.

3. ***DISCONNECT THE POWER AND LOCK IT OUT!*** (See Power Lockout procedure, page 6.)

4. Back off the three (3) knife adjusting screws on the top of the knife bar, (Figure 16 on page 37), as far as they will go (counterclockwise). A new knife will cut deeper than a knife that has been ground several times. If the adjusting screws are not backed off, damage will result to the new knife, paper deflector and/or the cutting stick.

5. Remove the right-most knife bolt. This bolt will not be accessible after the knife bar is raised.

6. Unlock and reconnect the power then raise the knife bar.

7. ***DISCONNECT THE POWER AND LOCK IT OUT!*** (See Power Lockout procedure, page 6.)

8. Remove the bolts in the two slotted holes of the knife bar and replace them with the knife lifters. Tighten the lifters enough to hold the blade in place. Remove the remaining bolts (Figure 18 on page 39).

Figure 18

9. Clear the table and put the empty knife scabbard on the table.

10. Grasp the knife lifters firmly while turning counterclockwise to release the knife from the knife bar. Slowly lower the knife down and to the right. Bring the left side out first and put the blade in the scabbard immediately.

11. Send the dull knife to the grinder.

8.1.1.2 Knife Installation

1. Lower the knife bar. See section 6.12.3.4 Knife Adjust on page 29 for directions on how to lower the knife bar.

2. Lock the paper deflector down by switching the hold down lever to the locked position (Figure 19).

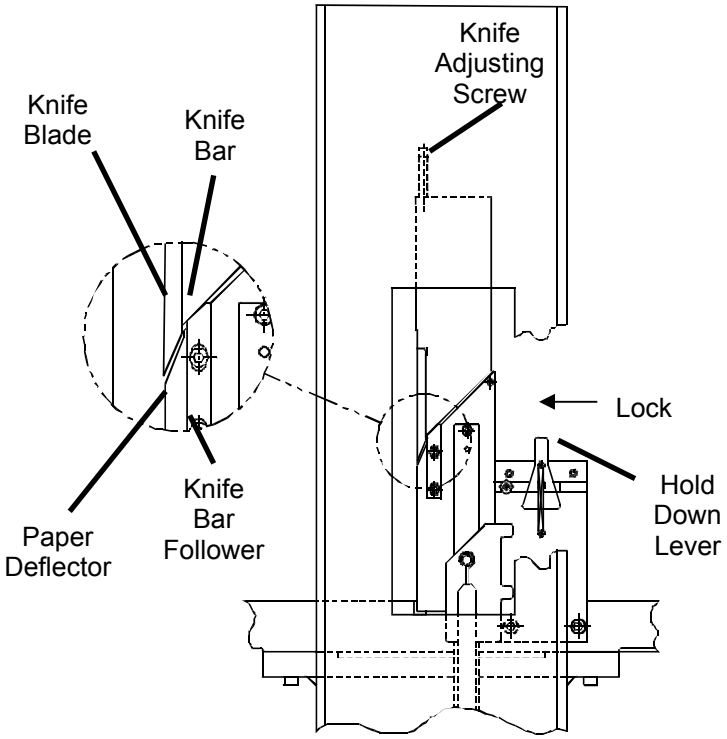

Figure 19

3. Raise the knife bar.

4. ***DISCONNECT THE POWER AND LOCK IT OUT!*** (See Power Lockout procedure, page 6.)

5. Use the cutting stick puller to remove the cutting stick. Turn the cutting stick to a new surface.

6. Clear the cutter table and extension tables. Place chipboard directly under the knife to prevent nicking if the blade hits the table.

7. Check to make sure that all three (3) of the knife adjusting screws have been backed out, see step 3 of Knife Removal section 8.1.1.1 on page 38.

8. Place the knife scabbard on the cutter table.

9. Remove the knife retainer screws holding the knife in the knife scabbard. Insert the knife lifters into the knife bolt holes on the knife (use the lowest holes) corresponding to the slots in the knife bar. Turn the threaded portion of knife lifters into the threaded holes in the knife until they contact the scabbard, then back off 1-1/2 turns.

10. Grasp the knife lifters, lift the blade, and insert the blade into the knife bar slot. Slowly guide the blade into the cutter right end first, then bring the left end in parallel to the knife bar. Raise the knife into the knife bar slot as high as it will go. Tighten the lifters to hold the knife.

NOTE: If the blade will not go in, either the lifters are screwed into the blade too far or the blade is not centered over the table, and the end of the blade is hitting the end stop in the knife bar.

11. Insert the rest of the knife bolts and washers, snug tighten them, but don't tighten completely. Be sure all bolts have washers. The correct washers are important for proper bolt clearances!

12. Replace the knife lifters with bolts and snug tighten.

13. Place a few sheets of paper across the table to cover the cutting stick.

NOTE: Before the knife bar is run down make sure the following is checked:

    a. The (3) knife adjusting screws have been backed off completely.

    b. The knife blade is raised as high as it can go in the knife bar over the entire length of the blade.

    c. The paper deflector is locked down.

14. Unlock and turn the power on.

15. Lower the knife bar. See section 6.12.3.4 Knife Adjust on page 29 for directions on how to lower the knife bar.

16. ***DISCONNECT THE POWER AND LOCK IT OUT!*** (See Power Lockout procedure, page 6.)

17. Turn the knife adjusting screws down, a little at a time, until the blade cuts through the paper evenly, over the entire length of the cut stick. Be sure the blade is parallel to the cutting stick, or one end may cut deeper than the other, causing uneven wear on the cut stick.

NOTE: When the knife is adjusted so it just cuts through the last piece of paper on the table evenly over the entire length of the cut stick, it is a good idea to turn each knife adjusting screw 1/4 turn tighter (clockwise). This can eliminate the need to readjust the knife after the very sharpest edge of the blade has worn off.

18. Tighten all the bolts.

19. Turn power on and send the knife to the “UP” position.

20. Make a test cut through a full lift of stock. Make minor adjustments by loosening the bolts and repeating steps 15 through 20.

NOTE: If the knife ends cut but the middle does not, you could have dips or uneven spots in either the knife or the cutting stick. These can be eliminated to some extent by laying 1/2" (13mm) wide strips of paper beneath the cutting stick to shim it up.

8.1.2 Cut Quality

Assuming the proper bevel angle has been chosen for the material being cut, cut quality depends upon blade sharpness and surface finish. Three cut characteristics can indicate a blade needs sharpening:

1. Burnishing appears on cut face of lift.
2. The cut does not appear straight when viewed from the top.
3. The profile of the cut (side view) does not appear to be perpendicular to the table.

Other signs that a knife needs sharpening are:

- The machine seems to strain while cutting. This strain can be heard in the hydraulic motor.
- The knife makes a “rougher” sound as it passes through stock.
- Nicks are visible on the cutting edge of the knife.

8.1.3 Bevel Angle

The most appropriate bevel angle depends upon four factors.

1. The length of time desired between sharpening
2. Physical properties of the stock being cut (hardness, impurities, density)
3. Power output of machine
4. Amount of clamp pressure applied

1. **Length of Time Between Sharpening**
   Under identical cutting conditions, knives with larger bevel angles will require sharpening less often than knives with smaller bevel angles. There is more material supporting the cutting edge of larger bevel angles.

2. **Physical Properties of Stock**
   In general a smaller bevel achieves a better quality cut. Hard, dense, and impure papers, however, will dull a small angle bevel quickly. Impurities may put nicks on the cutting edge. As a result, cut quality is lost quickly, and knives require sharpening often. Therefore, a larger angle bevel should be chosen for such materials. Soft materials can be cut with small angle bevels without adversely affecting sharpening frequency.

3. **Power Output of Machine**

As the bevel angle increases, more power is required to push the knife through stock. If a bevel angle is too large for a machine, the machine may take excessive wear-and-tear and may stall part way through the cut cycle. Although the knife will require sharpening less often, the machine may incur costly damage.

4. **Amount of Clamp Pressure Applied**
As clamping pressure increases, the pile density increases. As discussed in 2, above, more dense materials are harder to cut. This presents a dilemma. Higher clamping pressures are used to reduce draw when cutting with large angle bevels. While higher bevel angles increase the lifetime of the knife, high pressure clamping increases the material's density and detracts from knife life. As a result, a compromise must be made between knife life and cut quality.

8.1.4 Helpful Suggestions

- If your shop is large enough to purchase more than one set of knives, the following suggestions may be helpful. A set consists of 3 knives, one in the machine, one back up, and one at the grinder.

- If you cut a variety of stocks (easy and hard to cut), purchase two sets of knives. One set should be beveled at around 21^0 and the other around 23^0.

- Use the smaller angle bevel to cut softer stocks at lower clamping pressures. Begin by cutting the most pure, easy to cut stocks. As the knife dulls, begin cutting the less pure of the softer stocks.

- Use the larger bevel to cut harder more dense stocks at higher clamping pressures. Begin by cutting the softer and most pure of the hard stocks. Then move to cutting the harder and less pure of the hard stocks.

The following suggestions apply to those who can support only one set of knives. The bevel angle on the knives shipped with your machine was chosen for its versatility. It is not the ideal angle for every material, but these suggestions may improve the cut quality for those materials being cut with an inappropriate bevel:

- First, cut the softest, most pure stocks at lower clamping pressures.

- Move to the harder, more pure stocks at higher pressures. You may also need to reduce pile heights.

- Softer, impure stocks are next, followed by the hard impure stocks.

Following these guidelines will decrease the frequency of knife sharpening while maintaining a quality cut as long as possible.

Suggestions for all:

- If the machine seems to strain and cut quality is still good, reduce the pile height. You may also carefully apply glycerin to the bevel when cutting hard, coated stocks. Tie a cloth to the end of a stick; dip the stick in glycerin, and apply. Never apply by hand! In lieu of glycerin you may lightly rub white bar soap along the bevel. Lubrication will prolong the life of your machine and reduce maintenance.

- If the machine seems to strain and cut quality becomes unacceptable, the knife should be changed.

- Typical bevel angles vary from 26^0 to 19^0. The most appropriate general purpose bevel angle (23^0) was chosen for your machine. If your most common applications warrant a different angle, careful thought should be given before making the investment.

8.1.5 Knife Tips

- To prevent corrosion you received your knife coated with light oil. It should be REMOVED WITH CARE.
- While removing or installing a knife, be careful not to allow the edge to bump against the machine. Nicks will result.
- If a knife bolt is damaged, replace it.
- Always keep knife bolts securely tightened.
- Always use the heavy-duty knife bolt washers provided by Challenge. Failure to do so could result in scratching or marring of the clamp face.
- Store knives in a dry environment to prevent corrosion.
- Never attempt to service a knife in any way.

8.2 False Clamp Plate

⚠ CAUTION ALWAYS disconnect the power and LOCK IT OUT before installing or removing the false clamp plate. NEVER attempt to install or remove the false clamp plate while the machine is running. Remove all tools and stand clear when reconnecting power.

To prevent marking on pressure sensitive jobs, a false clamp plate has been included (installed) with your machine. This plate attaches to the bottom of the clamp. It is secured from the front of the cutter with three set screws which hold connector rods that pass up into the clamp.

NOTE: The forward limit value must be changed any time the false clamp plate is installed or removed. See the Operation chapter, section 6.12.2.1 (Parameters / False Clamp) on page 27.

1. ***DISCONNECT THE POWER AND LOCK IT OUT*** (See Power Lock-Out Procedure, page 6)

2. Position the false clamp plate under the clamp. The locator pegs should be positioned to the rear of the cutter and are set into holes in the bottom of the clamp.

3. With a 1/8" Allen wrench, back off the setscrews in front of the clamp and raise the plate up to the bottom of the clamp. It may be necessary to bring the clamp down slightly with the foot pedal in order to access the far left setscrew. Raise the false clamp plate evenly or it will have a tendency to bind. When the plate has been raised into position and is flush with the bottom of the clamp, tighten the setscrews to hold the plate in position.

4. Make sure that all tools have been taken off the cutter table, reconnect the power, and turn on the power.

NOTE: The cutter cannot make cuts smaller than 2-5/8" (66.7 mm) with the false clamp plate installed.

8.3 Lubrication

A clean, lubricated machine will cut more accurately, run longer, with less downtime, and fewer repairs.

Schedule lubrication maintenance both early in the day and early in the week. This allows the lubricants to work into the machine. Lubrication at the end of the day or week allows the lubricants to run off without any benefit to the machine.
Clean off old, dirty excess grease. Clean accumulated dust off valves, hoses, and connections. Built up dust increases operating temperatures and causes premature wear of all hydraulic components.

Oil and Grease Points **WEEKLY**.

Run the knife down and **Lock Out the Power**, see Power Lockout Procedure, page 6. All moving parts require lubrication. Remove all panel covers and look for all oil locations (marked with red paint). Make sure oil holes are not plugged and lubricate with a 30 weight oil. See the photos below for critical locations (not all locations are illustrated here). Notice that some are oil locations and some are grease points. Wipe off old and excess grease. Use a National Lubricating Grease Institute No. 1 consistency, extreme pressure grease.

Make sure to inspect the counter weight chain, both connecting links and the c-shaped channel for wear. If excessive wear is noticed replace parts immediately. Be sure to oil the counter weight chain.

IMPORTANT!!!! Upper and Lower Knife Bar Link Pins and Clamp Bellcrank Pins (grease fittings, oil holes, behind upper arch cover, below table, inside of base and on knife bar links) are the most critical lubrication points on the entire machine. Grease and oil WEEKLY to prevent buildup of hardened grease, or more often, if cutter is to be operated continuously for extended periods.

⚠ CAUTION Replace all guards. Never operate cutter with any guards removed.

GREASE ▭ OIL ⬭

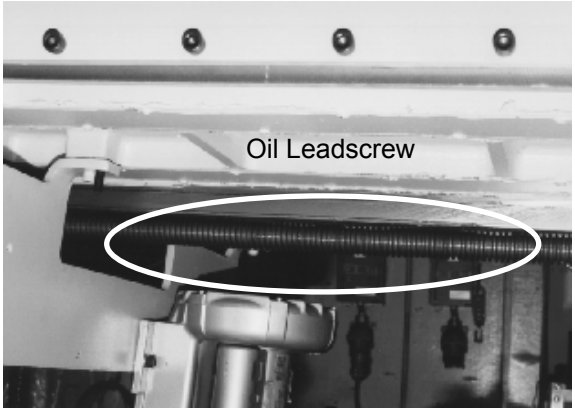
Oil Leadscrew

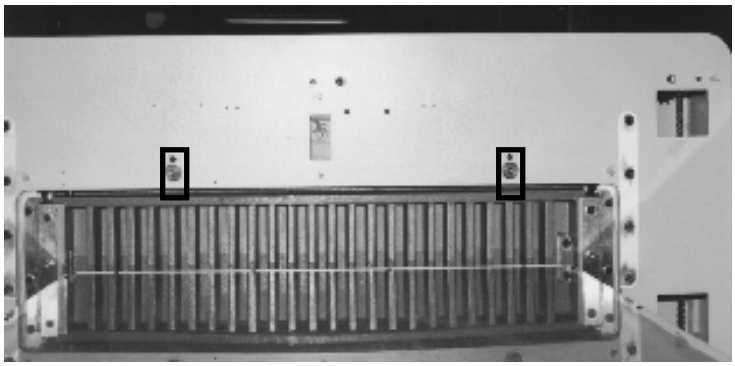

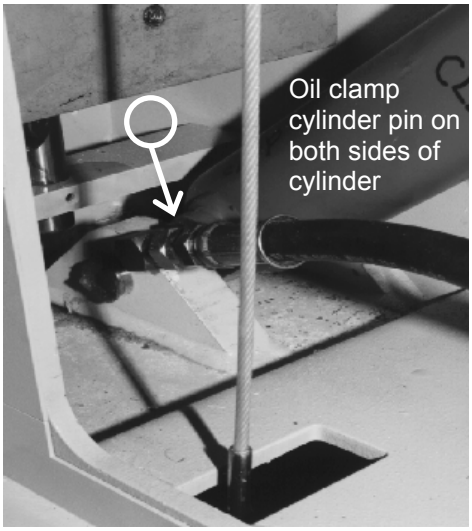
Oil clamp cylinder pin on both sides of cylinder

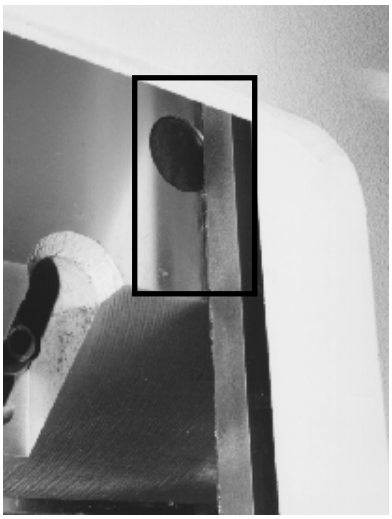

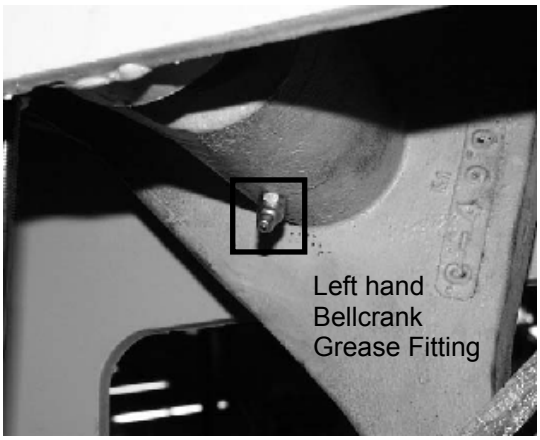
Left hand
Bellcrank
Grease Fitting

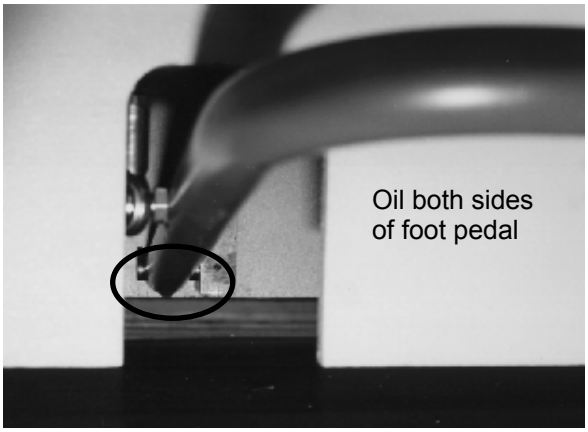

While lubricating, check pin locks to make sure they are in place and secure (Figure 20) there are a total of six.

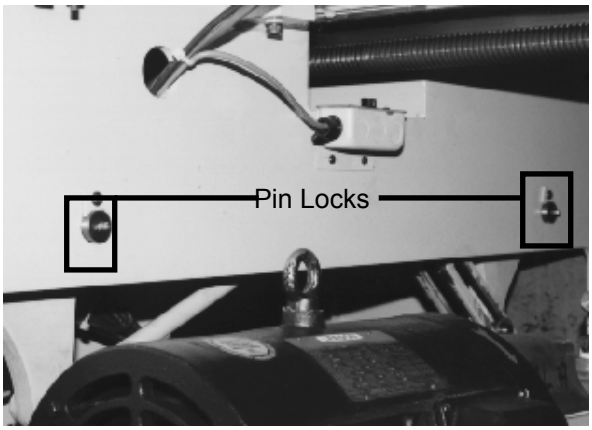

Figure 20

8.4 Hydraulic System

The Champion Series Cutters have both hydraulic cutting and hydraulic clamping operation. The cutter is powered by an electric motor coupled directly to a hydraulic pump. The pump has a fixed flow rate output of 10.5 GPM at 1800 psi (max. system relief setting) at 1800 RPM.

The clamp action is powered by a hydraulic cylinder. When the cut buttons are depressed, this cylinder pushes on a bell crank and brings the clamp down (or brings the clamp up to full hydraulic pressure if the manual foot clamp is down). The cutting action is also powered by a hydraulic cylinder connected directly to the knife bar. The knife sequence valve generates 1600 PSI of back pressure throughout the system to maintain full clamp pressure during the cut. One big advantage of the hydraulic system is the immediate return of the knife when the cut buttons are released. Instead of stopping in place, the knife immediately returns to the upper position.

The hydraulic fluid should be changed **YEARLY** or EVERY 1000 HOURS of operation.

The oil filter (Challenge part H-227-1) should be changed yearly or whenever any repairs are made to the hydraulic system.

NOTE: Failure to change the oil when needed can damage the seals in the clamp and knife cylinders.

Refill the tank with 15 gallons of an ISO (International Standards Organization) Viscosity Grade 46, rust, oxidation, and foam inhibiting hydraulic oil. **NOTE: NEVER use Automatic Transmission Oil or Brake Fluid as a substitute for the correct hydraulic fluid**. Dangerous operation conditions could result.

Check the level of the Hydraulic Reservoir WEEKLY or whenever the machine sounds like it is laboring (this could be due to low oil level).

8.4.1 Recommended Oils

Use only one of the recommended oils or an ISO VG 46 Hydraulic Fluid equivalent. Oils other than the recommended type will cause seals, cups, and O-rings to deteriorate. See CAUTION below.

Oil Name	Distributor
Rykon No. 46	AMOCO
Energol HLP 46	BP
AW Oil 46	Chevron
Pacemaker XD 46	Citgo
Super Hydraulic 46	Conoco
Univis N46	Exxon
Security AW 46	Gulf
Kenoil R&O AW 46	Kendall
DTE 15M	Mobil
Tellus 46	Shell
Rando HDZ 46	Texaco

8.4.2 Changing The Oil

Before beginning, you will need (3) empty five gallon buckets, an oil pan, and a transfer pump. If oil is hot, wait until it cools.

1. DISCONNECT THE POWER AND LOCK IT OUT! (See Power Lock-out Procedure, page 6)

2. Remove the hydraulic breather cap (see Figure 21).

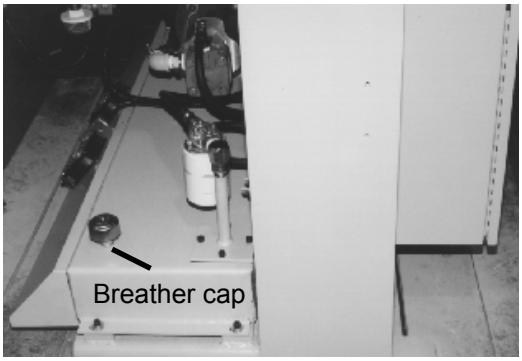

Figure 21

3. Place the suction line of the transfer pump into the breather cap hole. Place the pressure line of the transfer pump into an empty five-gallon pail.

4. Turn on the transfer pump and fill the pail. Repeat until tank is empty.

5. Replace the oil filter. Place a thin film of new hydraulic oil on the seal of the new filter to insure a proper seal. Firmly hand-tighten the filter onto the filter head.

6. Fill the tank with recommended fluid until the level is 3/4” below the top of the inside of the tank.

NOTE: DO NOT OVERFILL. Overfilling may cause leakage when the hydraulic fluid is hot.

7. Reinstall the breather cap.

8. Before turning on the machine, make sure all hydraulic hose fittings are tight. Make sure the oil filter has been firmly hand tightened to the filter head.

9. Unlock and turn on the main power to the machine. Turn on the hydraulic motor by pressing both cut buttons once. Inspect the hydraulic system for leaks. If leaks are found, turn off main power to the machine and tighten any leaking fittings.

10. Repeat step 9 as necessary.

8.5 Line Light Adjustment

The line light comes on whenever main power is turned to the ON position. The light from each of two bulbs reaches the table after passing between the knife and clamp, (Figure 22).

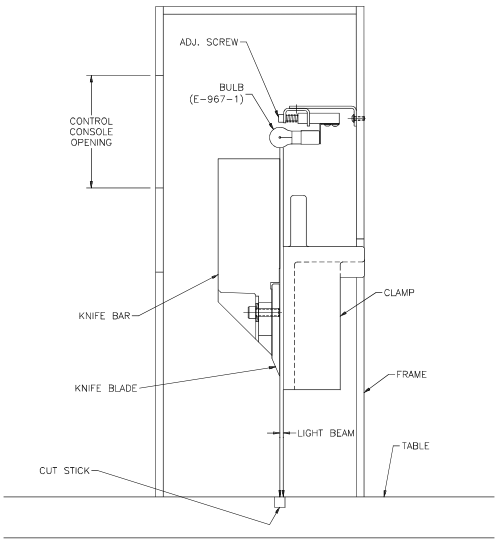

Figure 22

Each light is focused with an adjusting screw mounted on the line light bracket, behind the console.

1. Tilt the console down by removing the two screws at the top.

2. Place a wide sheet of paper on the cut stick to view the line.

3. Using a 3/16” hex wrench, turn one of the adjusting screws until you see a 1/16-1/8” beam.

4. Similarly, turn the adjustment screw of the other bulb until one, continuous beam is seen across the cut stick.

8.5.1 Line Light Bulb Replacement:

1. ***DISCONNECT THE POWER AND LOCK IT OUT!*** (See Power Lock-out procedure, page 6)
2. Tilt the console down.
3. Remove the old bulb by lightly pushing bulb into the socket and turning it counterclockwise.

⚠ CAUTION If the bulb is still hot, allow a few minutes to cool before changing.

4. Insert the new bulb into the socket and twist clockwise until the bulb locks into place.
5. Reattach the console.
6. Unlock and turn the power ON.
7. If necessary, adjust the line as above.

8.6 Operator Cleaning

HYDRAULICS

1. The hydraulic fans and tank should be wiped off weekly to maintain maximum cooling of the tank and hydraulic oil.
2. The hydraulic manifold and fittings should be wiped off weekly.

TABLE

1. The dust should be wiped from the air blower inlet screen on a weekly basis. This will insure unrestrained flow into the blower and maximum flow out of the air jets.
2. The front table should be cleaned periodically to remove rust and wax buildup. This should be done using cleaners provided in the optional cutter care kit. (p/n 16077) Do not clean extension tables with these cleaners. Damage to their finish will result.
3. The extension tables should be cleaned either with a dry or damp cloth or a mild water based detergent.
4. The rear table cover may be cleaned with glass cleaner or a mild, water based detergent applied to a damp cloth. Some petroleum-based solvents may damage the Plexiglas cover.

CONSOLE

- The console should be cleaned with a mild water based detergent applied to a damp cloth or paper towel. Petroleum based solvents will damage the console.

MACHINE FRAME

1. The machine frame should be cleaned with a mild, water based detergent applied to a damp cloth.

2. Always be careful when cleaning around safety warning labels. Use limited amounts of cleaners in those areas.

9.0 Maintenance Guide

⚠ NOTICE ⚠

The instructions on the following pages are for the use of trained service personnel only!

Attempting to perform repair and replacement procedures without proper training may cause machine damage or operator injury!

PARTS CUSTOMERS: The Challenge Machinery Company provides parts with the express understanding that they are to replace parts found missing or no longer serviceable on equipment designed and/or manufactured by Challenge. The Challenge Machinery Company assumes no liability for any modification or alteration to any Challenge products, and any such modification or alteration to any Challenge products is not authorized by The Challenge Machinery Company. Any modification or alteration of any Challenge product will void any remaining warranty.

9.1 Maintenance Adjustments

9.1.1 Squaring the Backgauge

To test the backgauge for squareness, place a small lift of paper against the left side of the backgauge (but not against the side guide) and make a cut.

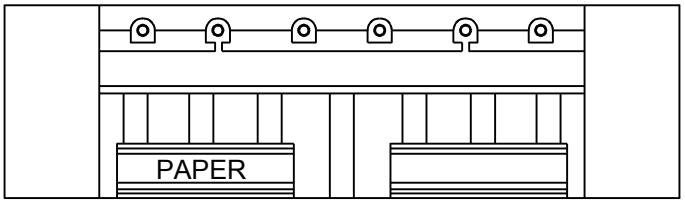

Figure 23

Now, leave the backgauge in the same position, flip the lift over and against the right side of the backgauge (but not against the side guide). Make another cut to see if any of the stock will trim off. Run two checks, one starting on the left and moving to the right, the other, moving from the right to the left. Trim in either sequence indicates the backgauge is out of square.

1. As machine wears, make sure the backgauge gibs are set properly first (see Backgauge Gibs), then follow steps 2 through 5.

NOTE: Gib adjustment is not necessary on initial machine setup because they have been adjusted at the factory.

2. DISCONNECT THE POWER AND LOCK IT OUT! (See Power Lockout procedure, page 6.)

3. Remove the rear table cover.

4. Loosen backgauge locking screw (smaller head). Loosen the jam nuts on the backgauge squaring screws (see Figure 24).

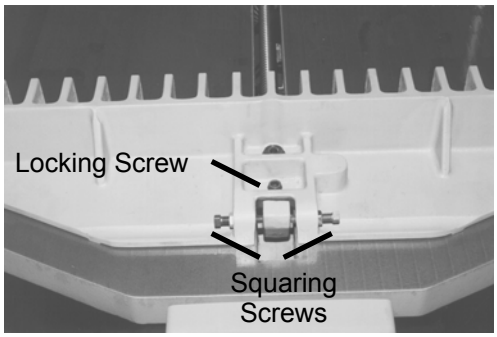

Figure 24

5. Back off the squaring screw on the side that the trim occurred and tighten the other. Make sure both screws are snug.

NOTE: If 1/8” of stock was trimmed off when checking for squareness, turning the proper squaring screw about one revolution will correct the problem. This relationship is constant, so turning the squaring screw 1/2 revolution will make up for about 1/16” of stock trimmed.

6. Replace the rear table cover. Unlock and reconnect the power.

7. Make another test. Continue to adjust and test until no trim occurs when testing in either sequence (steps 2 through 7).

8. ***DISCONNECT THE POWER AND LOCK IT OUT!*** (See Power Lockout Procedure, page 6)

9. Remove the rear table cover.

10. Tighten the jam nuts and lock screw.

11. Replace the rear table cover. Unlock and reconnect the power.

12. Check the backguage for squareness.

9.2 Backgauge Gibs

If you are having trouble keeping the backgauge square, check for backgauge side play. Position the backgauge approximately 2” (50-55mm) from the rear of the table and turn off power.

Remove the rear table cover. From the back, hold each end of the backgauge and try pulling one end while pushing the other to rock it side to side (Figure 25). If there is noticeable side-to-side play in the backgauge, the gibs will need adjusting. Check for play at various positions on the table.

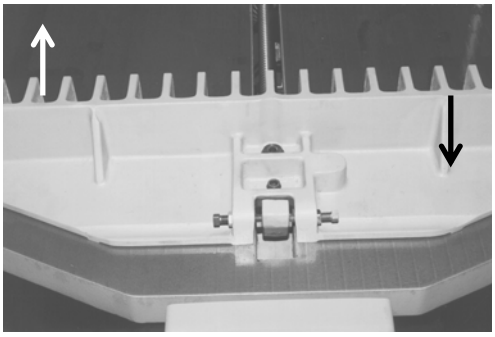

Figure 25

NOTE: There will be some front to rear movement between the backgauge nut and screw.

The backgauge has two gibs which ride on a iron rail underneath the table, (Figure 26 on page 55). These are adjusted with set screws which are held in position with jam nuts.

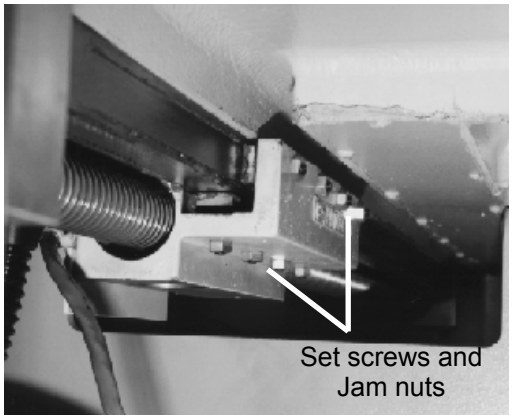

Figure 26

To adjust:

1. Run the backgauge back to 23” (600mm).
2. ***DISCONNECT THE POWER AND LOCK IT OUT!*** (See Power Lockout procedure, page 6.)
3. Remove the rear table cover.
4. Always adjust the side gib first. Loosen all jam nuts and adjusting screws then tighten the front and rear screws.
5. Pull each end of the backgauge and try to rock it side to side as before to check for play.
6. Continue to adjust these two screws until there is no play.
7. Lock the screws in place with the jam nuts.
8. Snug up the middle two screws and lock in place with the jam nuts.
9. Snug up the bottom gib adjusting screws finger tight and lock in place with the jam nuts.
10. Replace the rear table cover. Unlock and reconnect the power.
11. Run the backgauge back and forth to make sure it does not bind. Readjust if necessary.
12. Check the backgauge squareness.

9.3 Backgauge Drive Belt Adjustment

If the backgauge motor runs but the backgauge does not move, or slips, the belt may need adjustment, (Figure 27 on page 56).

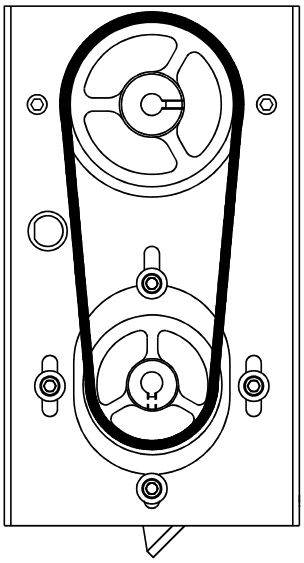

Figure 27 – Backgauge Drive Belt

To adjust the belt:

1. ***DISCONNECT THE POWER AND LOCK IT OUT!*** (See Power Lockout Procedure, page 6.)
2. Remove the drive belt cover guard at the rear of the table.
3. Loosen the four socket head screws holding the motor to the mounting plate.
4. Slide the motor down to put more tension on the belt, or lift it up to reduce tension for removing belt.
5. If belt cannot be tightened, replace with a new belt.
6. Adjust the tension of the belt so that there is a 1/2”-3/4” (10mm) flex remaining and tighten the mounting plate socket screws.
7. Replace the belt guard cover. Unlock and reconnect the power to the machine.

9.4 Lead Screw Adjustment Nuts

If play is noted in the forward pillow block and thrust bearings, take up the play in the adjustment nuts by:

1. ***DISCONNECT THE POWER AND LOCK IT OUT!*** (See Power Lockout procedure, page 6.)
2. Remove the drive belt cover guard at the rear of the table.
3. Loosening the lead screw jam nuts, (Figure 28 on page 57).

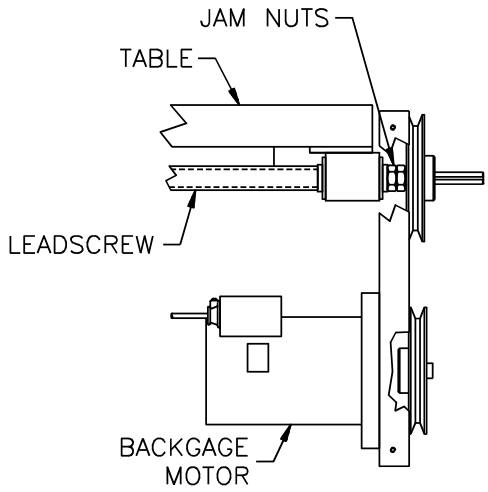

Figure 28 – Jam Nut Location

4. Snug up the inner nut to eliminate any play.
5. Tighten the nuts against each other.
6. Check the socket head bolts in the pillow block to make sure they are also tight.
7. Replace the belt guard cover. Unlock and reconnect the power to the machine.
8. Check the accuracy, it may need to be reset.

9.5 Clamp Cylinder

If the clamp piston bottoms in the cylinder before the clamp makes contact with the table, or if the clamp does not make full travel on the up stroke, the clamp cylinder may need adjustment. The clamp cylinder is located inside the frame, behind the left front enclosure door.

To adjust:

1. ***DISCONNECT THE POWER AND LOCK IT OUT!*** (See Power Lockout procedure, page 6.)
2. Loosen the jam nut.
3. Use the flats on the clamp cylinder shaft to turn the shaft into or out of the clevis as required, (Figure 29 on page 58).

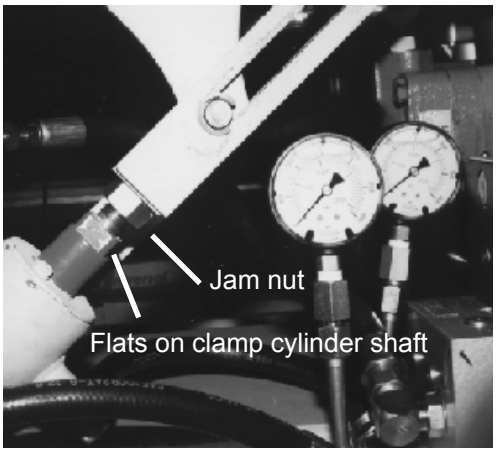

Figure 29

4. Retighten the jam nut securely.

5. Close the front enclosure door.

6. Unlock and reconnect the power to the machine.

9.6 Clamp Parallel Rod

If the clamp is not parallel with the table:

1. ***DISCONNECT THE POWER AND LOCK IT OUT!*** (See Power Lockout procedure, page 6.)

2. Loosen the jam nuts on each end of the clamp connecting rod, (Figure 30).

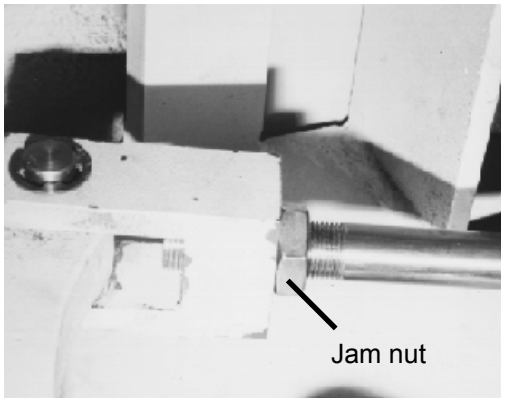

Figure 30

NOTE: One of the jam nuts has left hand threads.

3. Using the flats on the end exposed, turn the connecting rod and align the clamp with the table. If a single sheet is placed under each end of the clamp and manually clamped, a level clamp will not allow either sheet to be pulled out.

4. Retighten the jam nuts securely.

5. Unlock and reconnect the power to the machine.

9.7 Knife Bar Gibs

The knife bar gibs are two metal plates on either side of the arch that guide and hold the knife as it cuts. If adjusted too tight the knife may not come down, or the gibs and knife bar could be damaged by scoring. If too loose, you could get uneven or inaccurate cuts.

There are four, socket set screws with jam nuts on each side of the arch that adjust the gibs, (Figure 31). These should be adjusted only with the knife bar directly behind the bolts being tightened.

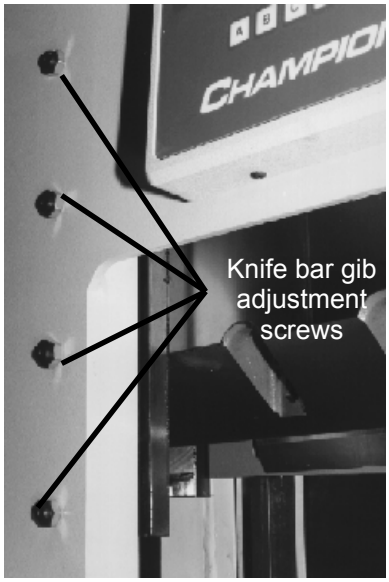

Figure 31

To adjust:

1. Lower the knife bar. See section 6.12.3.4 , Knife Adjust on page 29, for directions on how to lower the knife bar.
2. ***DISCONNECT THE POWER AND LOCK IT OUT!*** (See Power Lockout procedure, page 6.)
3. Loosen all (8) jam nuts on the gib adjusting screws and back the screws out 1/2 turn.
4. Adjust lower (4) screws until snug - not tight to eliminate the air gap between the knife bar and gib. While holding the adjusting screws tighten those (4) jam nuts.
5. Unlock and reconnect the power to the machine, then raise the knife bar.
6. ***DISCONNECT THE POWER AND LOCK IT OUT!*** (See Power Lockout procedure, page 6.)
7. Adjust the upper (4) screws the same way the lower (4) were adjusted. Tighten the jam nuts.
8. Turn the power back on and cycle the knife several times. Recheck the gibs (repeat steps 1-7 as necessary).
9. Don’t over-tighten the gibs; this will scrape off the lubricants and score the knife bar.

10. If your knife bar and gibs do get scored, simply remove only the burrs by scraping and then sanding smooth. Grease the gibs and the knife bar then reset the gibs. Deep scores need not be removed - they will retain lubricants.

9.8 Knife Cylinder Adjustment

The cylinder shaft is threaded into the clevis to adjust the position of the knife bar. When properly adjusted, the distance from the bottom of the knife bar, to the table with the knife bar in the down position should measure 1” (25.4 mm), (Figure 32).

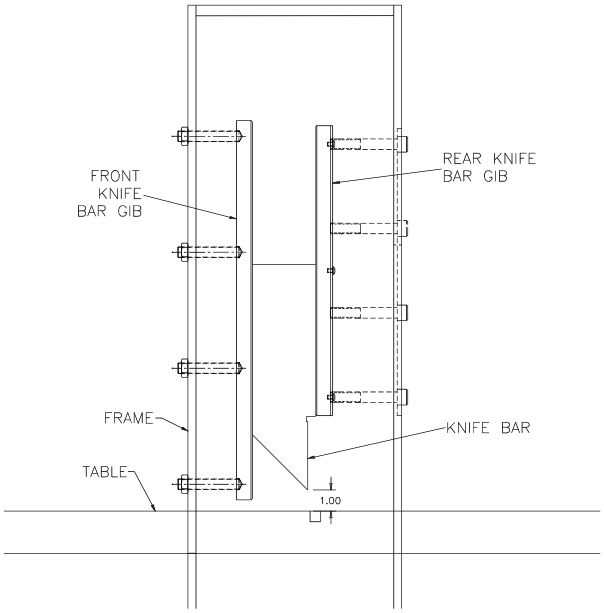

Figure 32

To adjust:

1. Remove the knife, see section 8.1.1.1 , Knife Removal on page 38.
2. Lower the knife bar. See section 6.12.3.4 , Knife Adjust on page 29, for directions on how to lower the knife bar.
3. ***DISCONNECT THE POWER AND LOCK IT OUT!*** (See Power Lockout procedure, page 6.)
4. Remove all covers and guards blocking access to the knife bar clevis (Figure 33 on page 61).

Figure 33

5. Loosen the knife bar clevis jam nut.

6. Loosen the set screw in the knife cylinder cam assembly (Figure 34). Slide the cam down the shaft to the top of the cylinder. This cam assembly is used to actuate the knife up and down proximity switches.

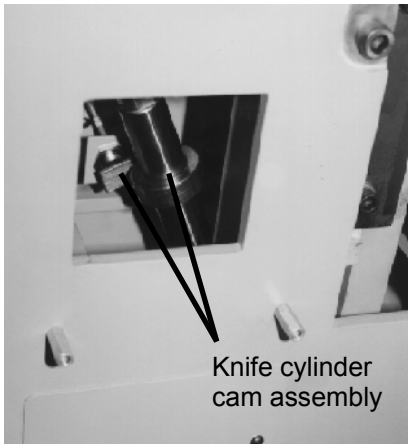

Figure 34

7. Using the 1” flats on the knife cylinder rod, rotate the cylinder rod to move the knife bar up or down to the required height.

8. Lock the jam nut securely in place.

9. Adjust the cylinder cam assembly. See section 9.10.1.1 Knife Up/Down Limit Switches on page 67.

⚠ CAUTION CRUSH HAZARD! Knife and clamp will return to the up position when the power is turned on and the cut buttons are pressed for the first time. Keep hands and tools away.

10. Replace all covers and guards.

11. Install the knife, see section 8.1.1.2 on page 39.

12. Unlock and reconnect the power to the machine. Allow the machine to run for a few minutes to work the air out of the hydraulic system.

9.9 Hydraulic Valve Adjustments

CAUTION Several of the following tests require the machine to be operational for checking and adjusting. Be very careful that tools and other people are clear of moving parts and that the cutter is not accidentally operated while adjustments are being made. Disconnect the power and lock it out, see Safety Precautions, page 6, whenever working on the machine unless the directions specifically require the machine to be powered.

For initial setup, adjust the valves in the following order:

1) Main System Relief Valve- 1800 psi
2) Knife Down Sequence Valve- 1600 psi
3) Clamp Up Sequence Valve- Adjust Visually
4) Electronic Clamp Control Valve- 1400max/400min psi
5) Knife Flow Control Valve- See adjustment on page 66.

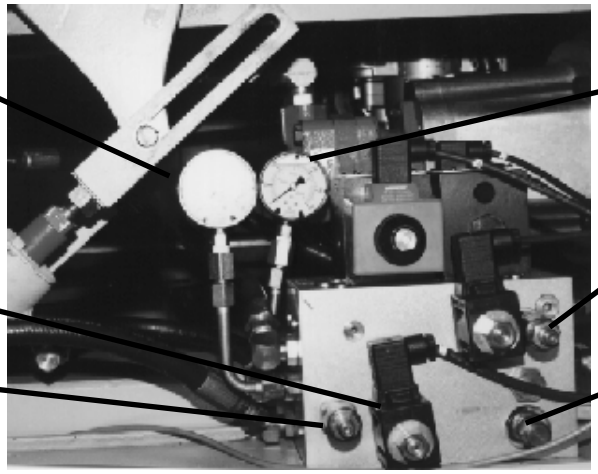

Figure 35

NOTE: Pressure settings fluctuate with oil temperature. **Set pressures when the oil is hot.**

9.9.1 Main System Relief Valve

This valve maintains the overall hydraulic pressure for the entire system. Factory setting: 1800 psi.

Check Procedure:

1. Open the left access door on front of the cutter.

2. Turn the power on and, with a small stack of paper under the clamp, make a cut to hold the knife down on the cutting stick. Read the pressure off the main system pressure gauge (front gauge) while the knife is down. If the gauge does not read 1800 psi, an adjustment is needed. You may need to send knife down in maintenance mode to read the gauge more easily.

To Adjust:

1. Loosen the lock nut on the relief valve. Use an Allen wrench to turn the adjusting screw. Turn clockwise to increase pressure, counterclockwise, to decrease pressure.

⚠ CAUTION PINCH POINT — It will require two people to perform the following adjustment. One holds the cut buttons in and the other adjusts the valve screw. Be extremely careful to keep hands and tools away from moving parts. The only thing that has to be handled is the adjusting wrench! A possible pinch point exists between the clamp parallel rod and the top of the valve solenoids. Do not place hands or tools in this area if the machine is to be cycled.

2. Make a cut and hold the buttons in or go to knife down adjustment in maintenance mode to cycle the hydraulics. While reading the main system gauge, adjust the valve screw until you have the correct pressure.

3. Tighten the lock nut while holding the hex wrench in place.

4. Proceed to readjust the other valves.

9.9.2 Knife Down Sequence Valve

This valve controls the clamp and knife sequence. It keeps the knife up until after the clamp has made contact. It is the upper right valve on the front of the manifold. Factory Setting: 1600 psi.

NOTE: Main System Pressure must be set at 1800 psi before making this adjustment.

Check Procedure:

1. Open the left access door on front of the cutter.

2. Press the cut buttons while reading the pressure on the main system pressure gauge (front gauge). The gauge should read approximately 1600 psi as the knife is moving down (when bottomed, the gauge will jump to 1800 psi showing the Main System Relief Pressure previously set).

3. If correct, proceed to check the remaining valves.

To adjust:

1. Loosen the lock nut.

2. Make a cut and hold the buttons in. While reading the main system gauge, adjust the valve until you have the correct pressure. Clockwise to increase, counterclockwise to decrease.

NOTE: The knife should not move until the clamp contacts the stock. If it does, you must increase the pressure.

3. Tighten the lock nut while holding the hex wrench in place.

4. Proceed to readjust the other valves.

9.9.3 Clamp Up Sequence Valve

(See Figure 35 on page 62)

This valve maintains clamp pressure so the clamp remains down until the knife has stopped in the up position. Factory setting: 800-1100 psi.

Check Procedure:

1. Open the left access door of the cutter.
2. Press the cut buttons, and while reading the pressure on the main gauge (front gauge), release them. The gauge should read between 800-1100 psi as the clamp is going up. There should be no clamp movement until the knife is stopped in the up position.
3. If correct, proceed to check the remaining valves.

To Adjust:

1. Remove the protective cap and loosen the lock nut on the clamp up sequence valve.
2. Make a cut, then release the buttons. Read the main gauge as the clamp is returning. Adjust the valve for a reading of 800-1100 psi.
3. Tighten the lock nut while holding the hex wrench in place and replace the protective cap.
4. Proceed to check the other valves.

9.9.4 Electronic Clamp Control Valve

The electronic clamping control allows the convenience of changing the clamp pressure at the control console. The pressure is controlled by use of the up and down arrow keys, 0 being the lowest - 15 the highest; and is indicated in the upper right hand corner of the display.

See below:

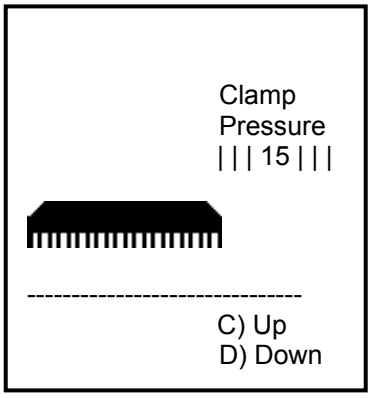

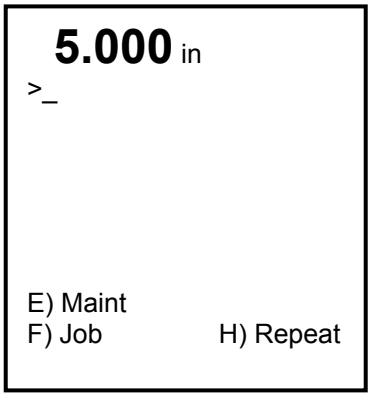

Adjustment of the Electronic Valve:

1. To adjust the pressure range, enter the Maintenance Mode and choose Diagnostic.
2. To adjust the pressure, select Clamp Adjust. See the screen on the following page:

```
5.000 in

        DIAGNOSTIC
        Error Code
        Sensor Data
        Clear Memory
        Clamp Adjust

Select & press enter
A) Maint        C) Send
B) Job          D) Exit
```

3. Setting the Maximum Pressure:

Perform a cut cycle, after the clamp has contacted the table and while the knife bar is coming down, read the pressure on the right hand pressure gauge. It should be set at 1400 p.s.i. If not, correct by using the up and down arrow keys. When finished, choose D), to exit and go to the minimum pressure set up seen shown below:

```
5.000
 Set Maximum
 >

 Press  /\  to Increase

 Press  \/  to Decrease


 A) Main         C) Send
 B) Job          D) Exit
```

4. Setting the Minimum pressure:

Perform a cut cycle, after the clamp has contacted the table and while the knife bar is coming down, read the pressure on the right hand pressure gauge. It should be set at 400 p.s.i. If not, correct by using the up and down arrow keys. When finished, choose C), to return to the Send mode, or D) Exit to return to Diagnostics.

```
5.000
 Set Minimum
 >

 Press  /\  to Increase

 Press  \/  to Decrease


 A) Main         C) Send
 B) Job          D) Exit
```

9.9.5 Knife Flow Control Valve

This valve controls the amount of time it takes for the knife to move after the clamp has contacted the paper.

1. Remove the screw and plastic cap on the pressure switch.

2. A 3/16” allen wrench is required for the internal adjustment screw in the pressure switch. Turning the screw clockwise increases pressure; turning it counter-clockwise decreases pressure. With about an 1/2” of paper on the table, adjust the switch so that input #7 on the main circuit board (see page 73) turns on after the clamp contacts the stock and just as the knife starts to move. (The led may go on and off intermittently after initial contact.)

3. If the switch turns on early in the cut cycle, the knife will move while the clamp is coming down. If the switch turns on too late after the clamp contacts the paper, there will be a delay in the knife movement and the computer will issue a pressure switch error message. (To erase the error message depress the clear key.)

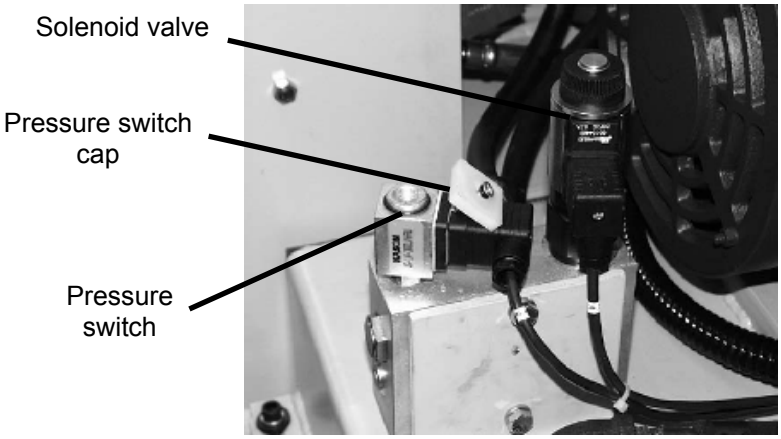

9.10 Fuses

⚠ CAUTION FIRE HAZARD. Replace only with same type and rating fuse.

The Champions each have a set of fuses. The fuses are located inside the main power box, (Figure 36). Check the label inside the cover for correct ratings for these fuses. Labels are reproduced with the drawings at the back of this manual in case those on the cover may be damaged or illegible.

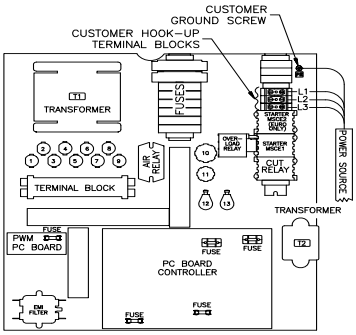

Figure 36

9.10.1 Limit Switches

⚠ CAUTION These tests require the machine to be operational for checking and adjusting. Be very careful that tools and other people are clear of moving parts and that the cutter is not accidentally operated while adjustments are being made.

Challenge Champion cutters incorporate proximity switches to detect stages of operation. These types of limit switches have no moving parts and are more reliable than the old style of contact switches.

NOTE: Adjust the switches in the following order:

1. **Knife Up/Down Limit Switch**
2. **Hydraulic Up Limit Switch**
3. **Clamp Up Limit Switch**

⚠ CAUTION **CRUSH HAZARD!** When the limit switch is actuated, the clamp will return to the up position. Keep hands and tools clear.

9.10.1.1 Knife Up/Down Limit Switch

The knife up and knife down limit switches are mounted on separate brackets. An indicator light on the switch body comes on when the switch is actuated (proximity switches must be within 1/8" (3.2mm) to actuate). One cam assembly activates both the up and down limit switches during the respective stages of operation.

To adjust:

1. Lower the knife bar. See section 2.12.4 Knife Adjust for directions on how to lower the knife bar.

2. ***DISCONNECT THE POWER AND LOCK IT OUT!*** (See Power Lockout procedure, page 6.)

3. Remove covers and guards blocking access to the limit switches.

4. Loosen the set screw holding the cam assembly in place on the knife cylinder shaft.

5. Move the cam assembly so that the tab that is welded on the collar of the cam assembly (see Figure 37 on page 68) is centered on the diameter of the proximity actuator switch (limit switch). Make sure the face of the tab on the collar is parallel to the face of the proximity switch then tighten the set screw in the cam assembly to hold the collar in place. The distance between the cam assembly and the proximity switch should be no more than 1/8" (3.2mm) of an inch.

6. Replace all covers and guards.

7. Unlock and reconnect the power to the machine.

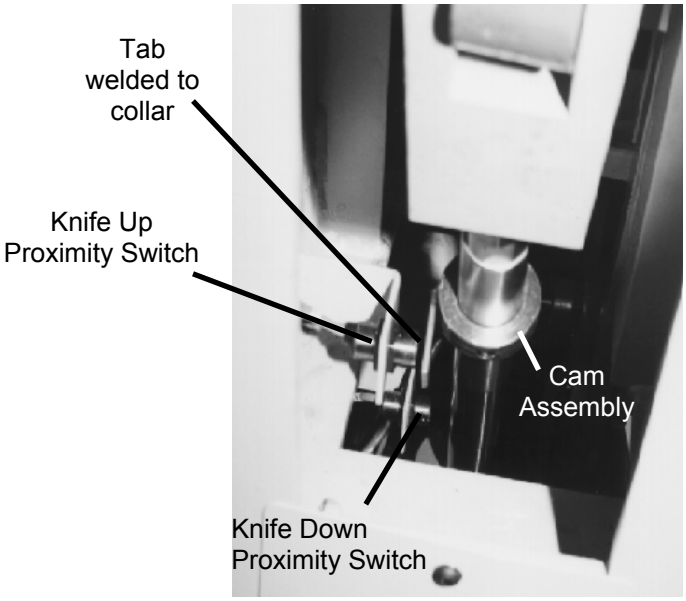

Figure 37

9.10.1.2 Hydraulic Up Limit Switch

This switch is mounted on the left, rear leg at the base of the frame (Figure 38). An indicator light on the switch body comes on when the switch is actuated (proximity switches must be within 1/8" (3.2mm) to actuate). The switch senses the extension of the clamp cylinder at the top of its stroke. This stops hydraulic power to the clamp and knife. If the switch is not properly set, the knife and clamp cylinders will be under constant load (indicated by excessive heat and noise).

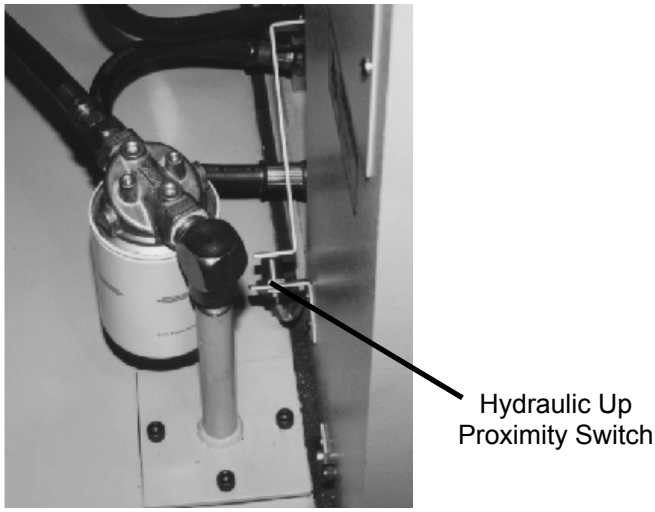

Figure 38

To adjust:

1. Make sure the clamp has returned to the upper position as far as it can go.
2. ***DISCONNECT THE POWER AND LOCK IT OUT!*** (See Power Lockout procedure, page 6.)
3. Loosen both lock nuts and adjust the switch until the indicator light on the switch lights up.

4. Unlock and reconnect the power to the machine.

5. Turn on the machine and press the cut buttons once to start the hydraulic motor.

6. Press the cut buttons to cycle the clamp and check clamp position.

9.10.1.3 Clamp Up Limit Switch

This switch is mounted inside the rear of the arch casting, (Figure 39). An indicator light on the switch body comes on when the switch is actuated (proximity switches must be within 1/8” (3.2mm) to actuate). It is tripped by the clamp when the clamp is in the up position. This switch prevents backgauge movement if the clamp is not up. It also diverts the air from the table when the clamp is down to prevent the stock from moving during a cut.

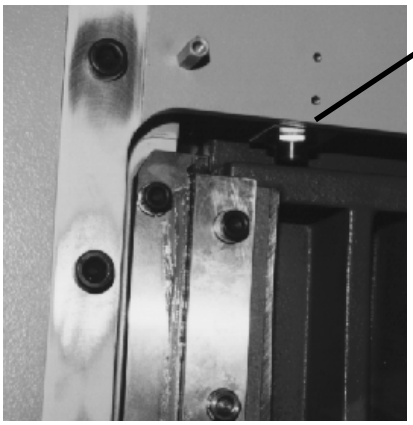

Figure 39

To adjust:

1. Make sure the clamp has returned to the upper position as far as it can go.

2. ***DISCONNECT THE POWER AND LOCK IT OUT!*** (See Power Lockout procedure, page 6.)

3. Loosen both lock nuts and adjust the switch until the indicator light on the switch lights up.

4. Unlock and reconnect the power to the machine.

5. Turn on the machine and press the cut buttons once to start the hydraulic motor.

6. Press the cut buttons to cycle the clamp and check clamp position.

10.0 Troubleshooting

CAUTION **Never work on this machine with the power on unless the instructions say the machine power must be on. Lock the power off at the wall disconnect switch. See Power Lockout Procedure, page 6.**

WON'T START
1. Fuse blown
2. Starter defective
3. Loose plug or wire
4. Cut button defective
5. Check error codes

CUT BUTTONS PUSHED- MACHINE SHUTS OFF
1. Knife and clamp are out of sequence. Turn off power and turn back on.
2 Check clamp and knife up limit switches.
3. When cutting a full pile, the clamp up limit switch does not break contact, either adjust limit switch or cut down on pile height.
4. Defective circuit board

CUT BUTTONS ACTIVATED- WON'T CUT
1. A cut button is defective.
2. Motor wired wrong, going in opposite direction of the arrow sticker on the motor
3. Pilot check on the knife cylinder is defective
4. Sequence valve pressure is set too high
5. Either down solenoid in valves inoperative
6. Knife up limit switch is not properly adjusted
7. Defective circuit board

ERRATIC OPERATION- POWER LOSS
1. Low hydraulic oil level
2. Debris in relief valve
3. Defective pump
4. Oil bypassing clamp cylinder seals

CLAMP WON'T OPERATE
1. Bind in linkage or gibs
2. Clamp pressure reducer valve set too low
3. High pressure solenoid defective
4. Relief valve defective
5. Clamp return spring defective

CLAMP WON'T HOLD PRESSURE
1. Clamp cylinder seals worn
2. Pressure valve setting too low
3. Clamp not parallel to table

CLAMP WON'T BOTTOM
1. Clamp cylinder out of adjustment
2. Clamp return spring broken or out of adjustment

CLAMP NOT PARALLEL TO TABLE
1. The clamp connecting rod is out of adjustment.

CONCAVE CUTTING- ENDS WIDE, CENTER NARROW
1. Excessive moisture at edges of paper
2. More ink on edges of lift

CONCAVE CUTTING- VARIATION OF TOP AND BOTTOM
1. Soft stock not firmly clamped
2. Knife dull or ground incorrectly
3. Knife bar gibs loose
4. Air in stock when clamped, pulls away from backgauge
5. Clamp not parallel to table

INCONSISTENT STOPPING OF KINFE IN UP POSITION
1. Bind in knife linkage or gibs
2. Up sequence valve not properly adjusted
3. Knife links worn

HESITATION OF KNIFE
1. Dull knife
2. Seals worn in knife or clamp cylinder
3. Defective pilot check on knife cylinder
4. Knife links worn

KNIFE WON'T RETURN
1. Defective high pressure valve
2. Directional valve(s) stuck in
3. Up sequence pressure too low

CLAMP WON'T RETURN
1. Up sequence pressure too high
2. Bind in clamp linkage or gibs
3. Clamp not parallel to table
4. Clamp return spring defective

KNIFE DRIFTS DOWN
1. Knife bar gibs out of adjustment
2. Defective pilot check on knife cylinder
3. Defective seals in knife cylinder
4. Knife latch out of adjustment

KNIFE STOPS IN STOCK
1. Knife dull
2. Relief valve defective
3. Pressure control valve clogged or defective
4. Knife cylinder seals worn
5. Clamp cylinder seals worn
6. Motor stalling due to low voltage or too small wire to machine

NOISY AND SLUGGISH HYDRAULIC SYSTEM
1. Cylinder seals worn on clamp or knife
2. Low on hydraulic fluid
3. Worn spline coupling in motor/pump

INACCURATE CUTTING
1. Backgauge not square
2. Knife bar has play- tighten gibs
3. Backgauge gibs loose

4. Dull knife (See Knives section page **Error! Bookmark not defined.**)
5. Clamp not parallel to table
6. Accuracy not set correctly

BACKGAUGE SPEED ERRATIC
1. Oil on pulley belt
2. Belt/pulley loose

BACKGAUGE MOVEMENT ERRATIC
1. Backgauge gibs loose or binding on table way (rail under table)
2. Backgauge nut binding on leadscrew, screw bent or dirty
3. Problem with electrical drive component
4. Defective circuit board

DRAWING OF STOCK
1. Dull knife
2. Low clamp pressure
3. Hydraulic fluid low
4. Air in lift- reduce pile height
5. Clamp not parallel to table

SLOW KNIFE
1. Defective seals in clamp cylinder
2. Defective pilot check valve on knife cylinder
3. Pump not achieving full pressure
4. Main system or clamp pressure reducer bypassing fluid

10.1 P.C. Board Assembly – EE-2807-1 Rev. B

The following is a description of the various diagnostic LED's in the power panel. These lights are indicators used to show input and output status.

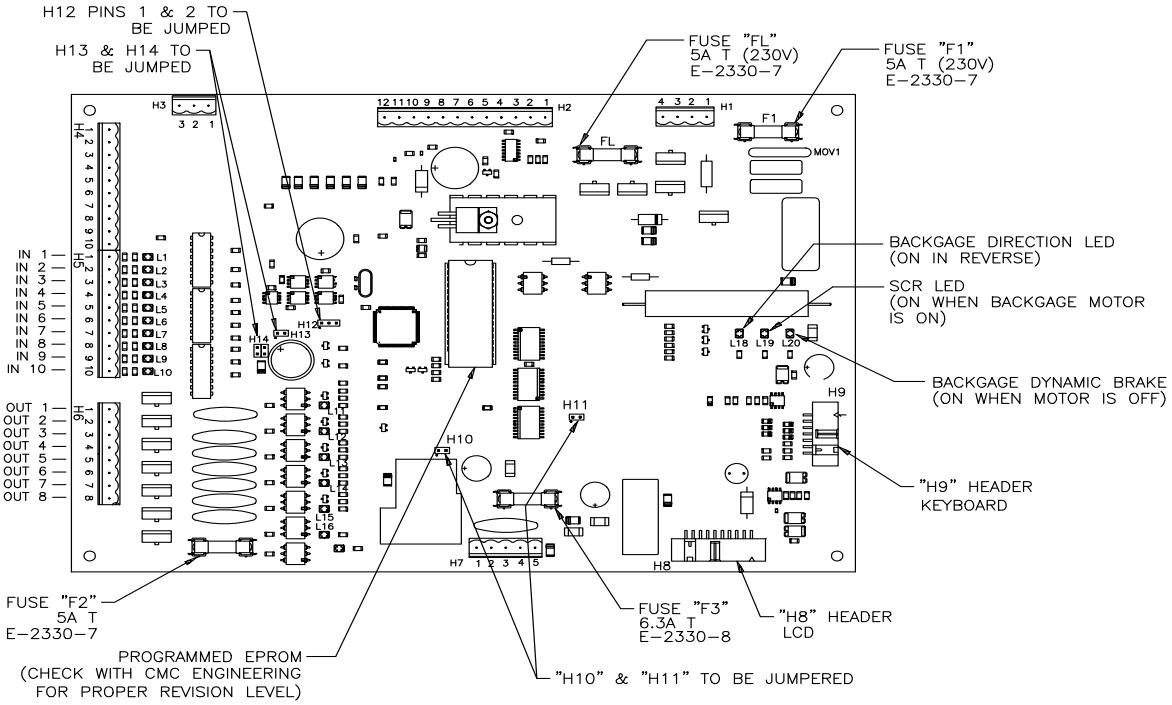

*ORDER IC CHIP SEPARATELY

*IC CHIPS:

EE-1766-47 FOR 370 "X" CUTTER, "XG" SPACER

DESCRIPTION		
IN1:	Left Cut Switch	on when switch is depressed
IN2:	Clamp Up Limit	on when clamp is up
IN3:	Hyd. Cylinder Up Limit	on when hyd. are up
IN4:	Knife Up Limit	on when knife is up
IN5:	Right Cut Switch	on when switch is depressed
IN6:	Cut Relay	on when CR is pulled in
IN7:	Pressure Switch	on when switch is energized
IN8:	Aux. Contactor	on when starter is energized
IN9:	Knife Down Limit	on when knife is down
IN10:	Knife Latch Switch	on when knife is up

DESCRIPTION		IDLE STATUS
OUT1:	Motor starter	on after switches are depressed
OUT2:	Cut Relay	on when cutting
OUT3:	Air Relay	on when blower is on
OUT4:	Air Solenoid	on when table air is called for
OUT5:	Not Used	
OUT6:	Unload Solenoid	on during cut cycle
OUT7:	Knife Latch Solenoid	off when knife is up

10.2 XG Description of Error Messages

Message	Description	Test
Knife Latch Failure	Latch failed to disengage knife bar within 0.6 seconds	Loose solenoid wire; mechanical bind; knife up prox. switch out of adjustment; defective prox. switch
Clamp Up Failure	Clamp failed to return to up position within 7 seconds	Clamp up sequence valve; solenoid (cut) valve
Knife Down Failure	Knife failed to come down within 4 seconds	Low main pressure; low voltage; knife down sequence valve
Knife Up failure	Knife failed to return within 1.17 seconds	Mechanical bind; solenoid (cut) valve
Clamp or Knife Down	Clamp or knife stayed down	No main pressure; stuck solenoid valve
Sequence Error	Timing error in either up or down cycle	Low main pressure; any sequence valve
Knife at Both Limits	Knife up and down prox. switches are on at the same time	Prox. Switches; broker knife bar components
Send Cancelled	Console key was pressed while backgauge was moving	Operator error; key board failure
Number Outside of Limit	Selected cut position beyond	Operator error; false clamp limit
Positioning Error	Backgauge failed to move to programmed position within +/- .005	Mechanical bind; encoder failure; main pcboard; leadscrew thrust washer loose; gibs loose
Hydraulic Latch Failure	Hydraulic latch holding relay failed to pull in	Defective relay
Backgague Failure	Backgauge doesn't move	Mechanical bind; encoder failure; main pcboard; blown fuse
Shorted Key Error	Console key shorted	Operator error; defective keyboard
Cut Relay Error	Cut relay energized when	Cut relay is stuck it should be off
Pressure Switch Error	Too much delay in knife cycle	Adjust pressure switch

****If Error Codes cannot be reset by depressing the Clear Key, the power will have to be turned off and on****

10.3 XG Sensor Data Abbreviations

RGHTCUT	0	Right Cut Button	Under RHS of table front
LEFTCUT	0	Left Cut Button	Under LHS of table front
CUTRLY (input)	1	Cut Relay	On power panel
HYDLAT	1	Hydraulic Latch Relay	Main pcb board
KNFDWN	1	Knife Down Proximity Switch	On bracket attached to knife cylinder
PRESET	1	Preset Sensor	Rear of cutter, under left side of table
CUTSOL (output)	0	Cut Relay	Relay below motor contactor
AIRSOL	0	Air Solenoid	Solenoid Valve on top of air motor
KNLATSOL (output)	0	Knife Latch Solenoid	Behind display console, on latch assembly
CLAMPUP	1	Clamp Up Proximity Switch	Rear of cutter, right side of arch
HYDUP	1	Hyd. Clamp Up Proximity	Rear of cutter, at top of clamp cylinder
KNFUP	1	Knife Up Proximity Switch	On bracket attached to knife cylinder
MTRSTRT (input)	0	Motor Start Relay	On top of motor contactor block
KNFLAT (input)	0	Knife Latch Prox.	Behind display console, on latch assembly
HYDMOT (output)	0	Hydraulic Motor Relay	Contactor, top right of main pcb
AIRMTR	0	Air Table Motor	Behind oil tank
LTLINE (output)	1	Line Light Output	Line light relay on main pcb
UNLOAD	0	Unload Valve	Solenoid Valve on front of Manifold

11.0 Machine Drawings

11.1 Main Assembly – Front View – 49000 Sht. 1 of 14 Rev. A

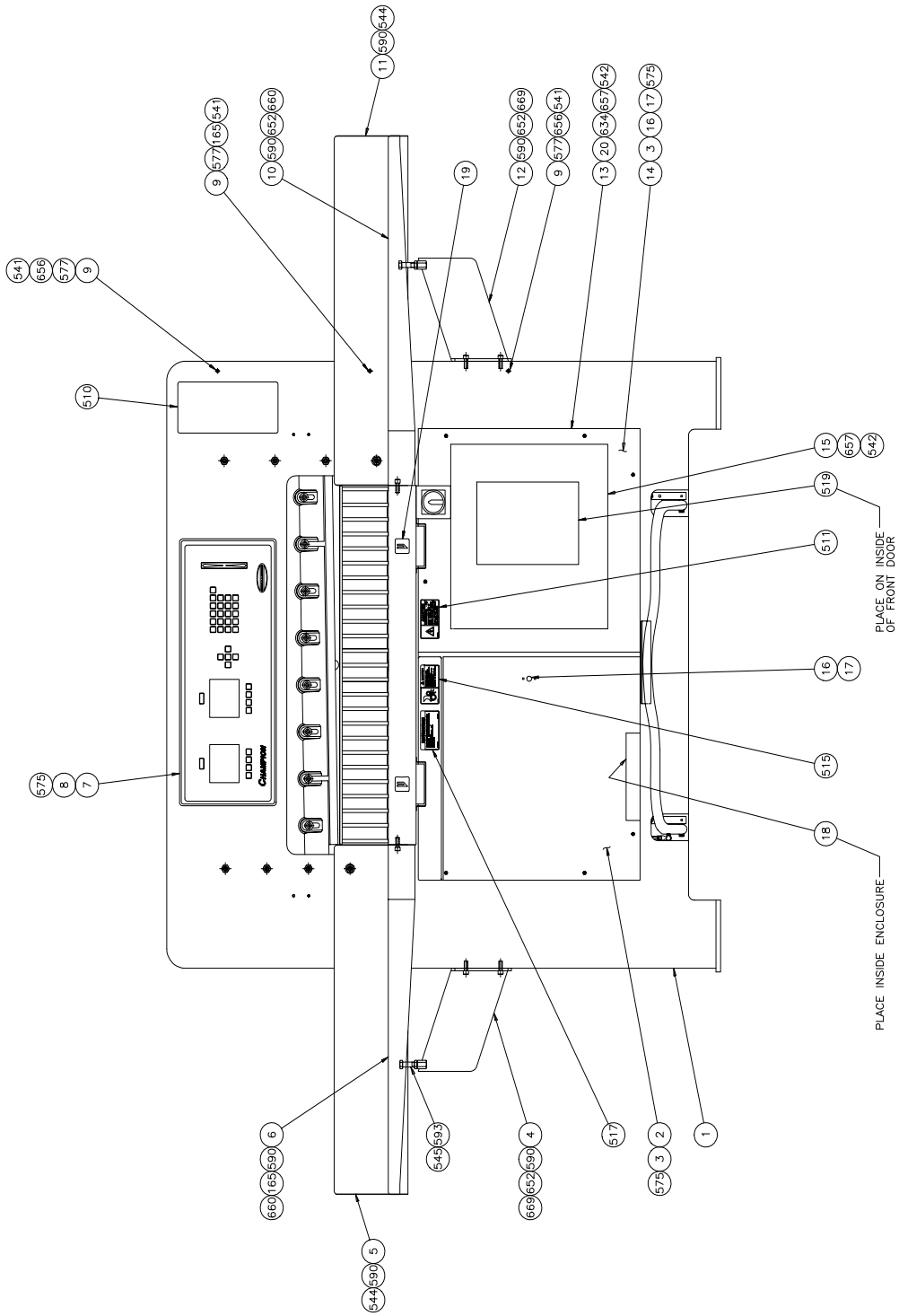

11.2 Main Assembly – Side View – 49000 Sht. 2 of 14

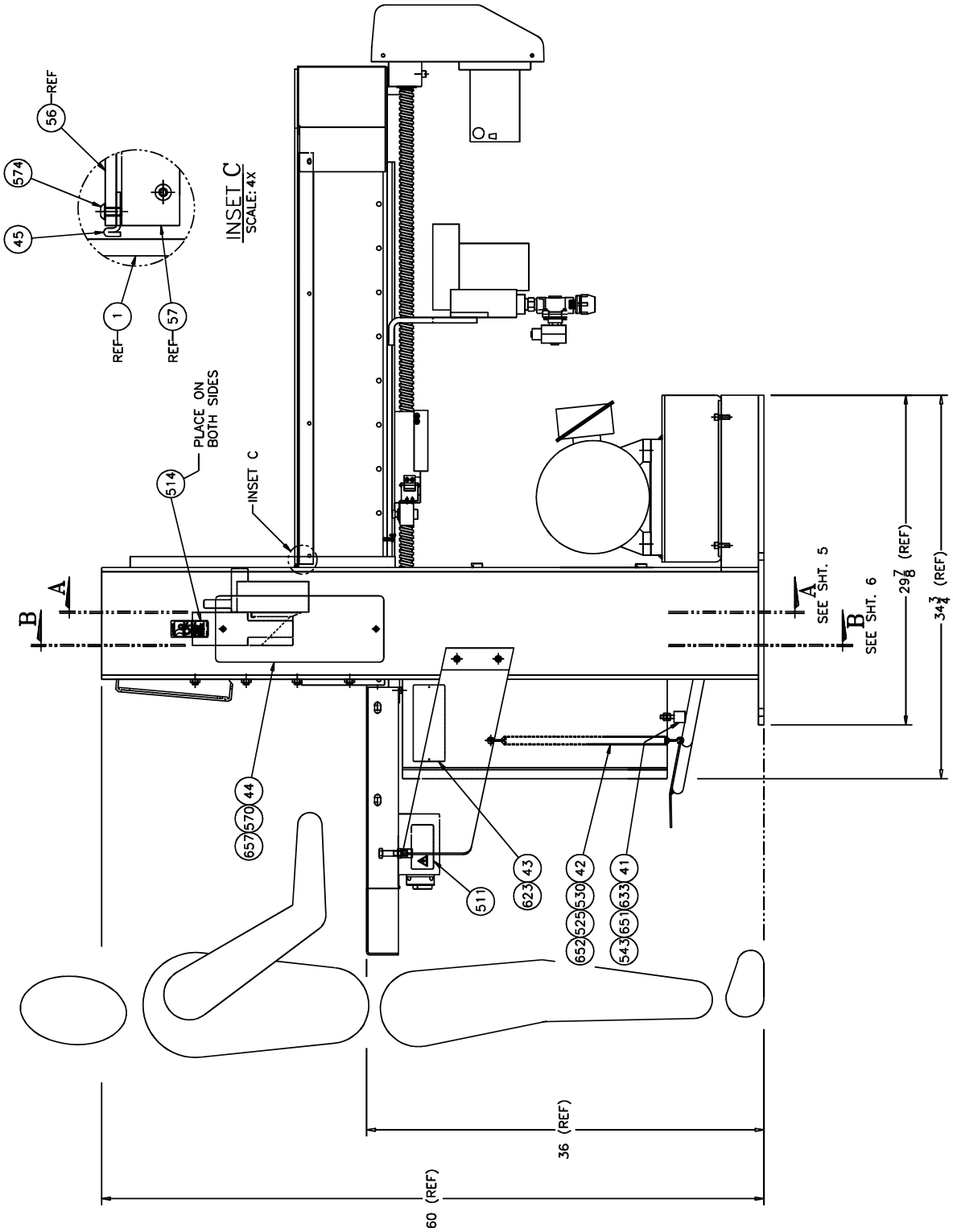

11.3 Main Assembly – Top View – 49000 Sht. 3 of 14

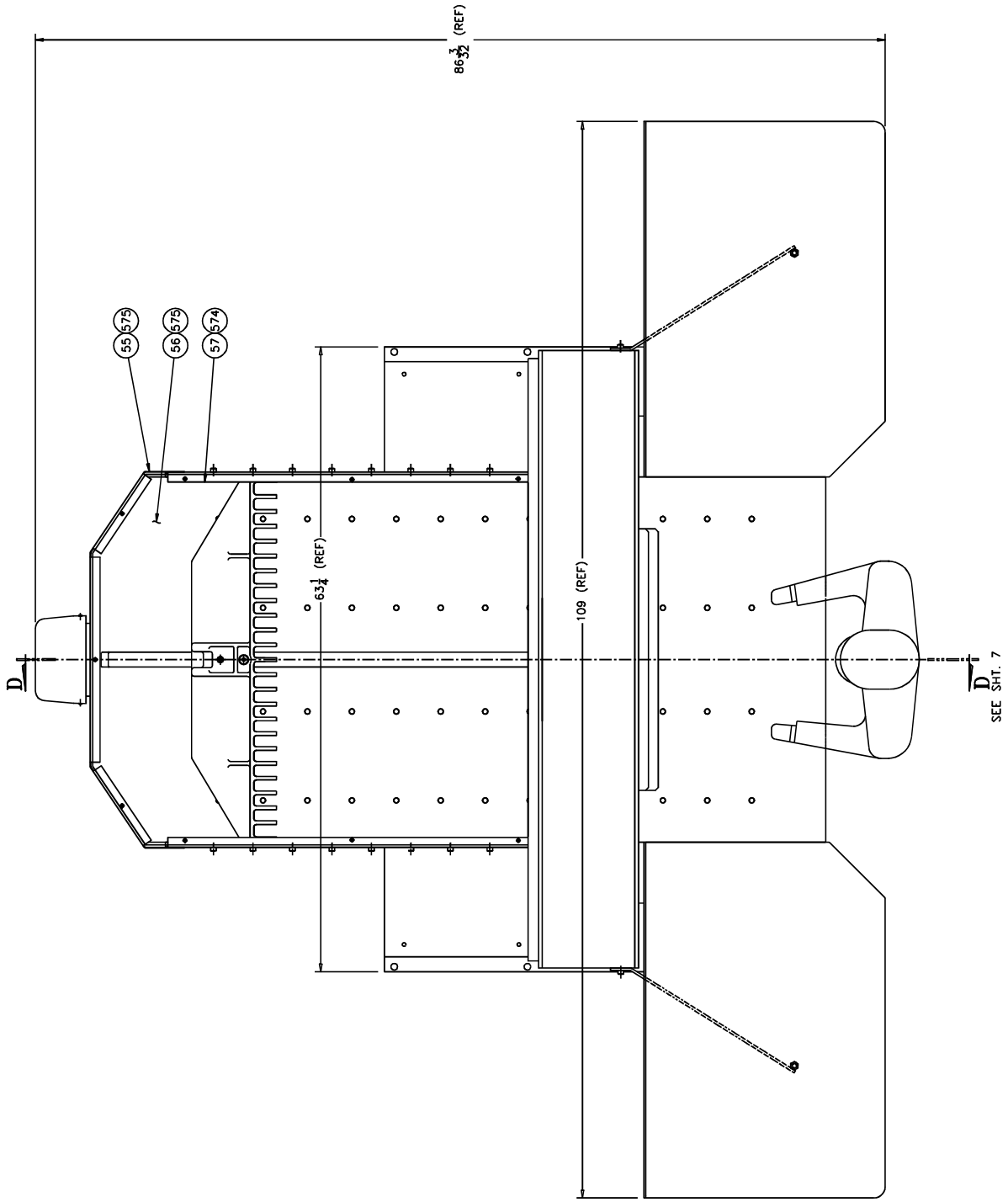

11.4 Main Assembly – Rear View – 49000 Sht. 4 of 14

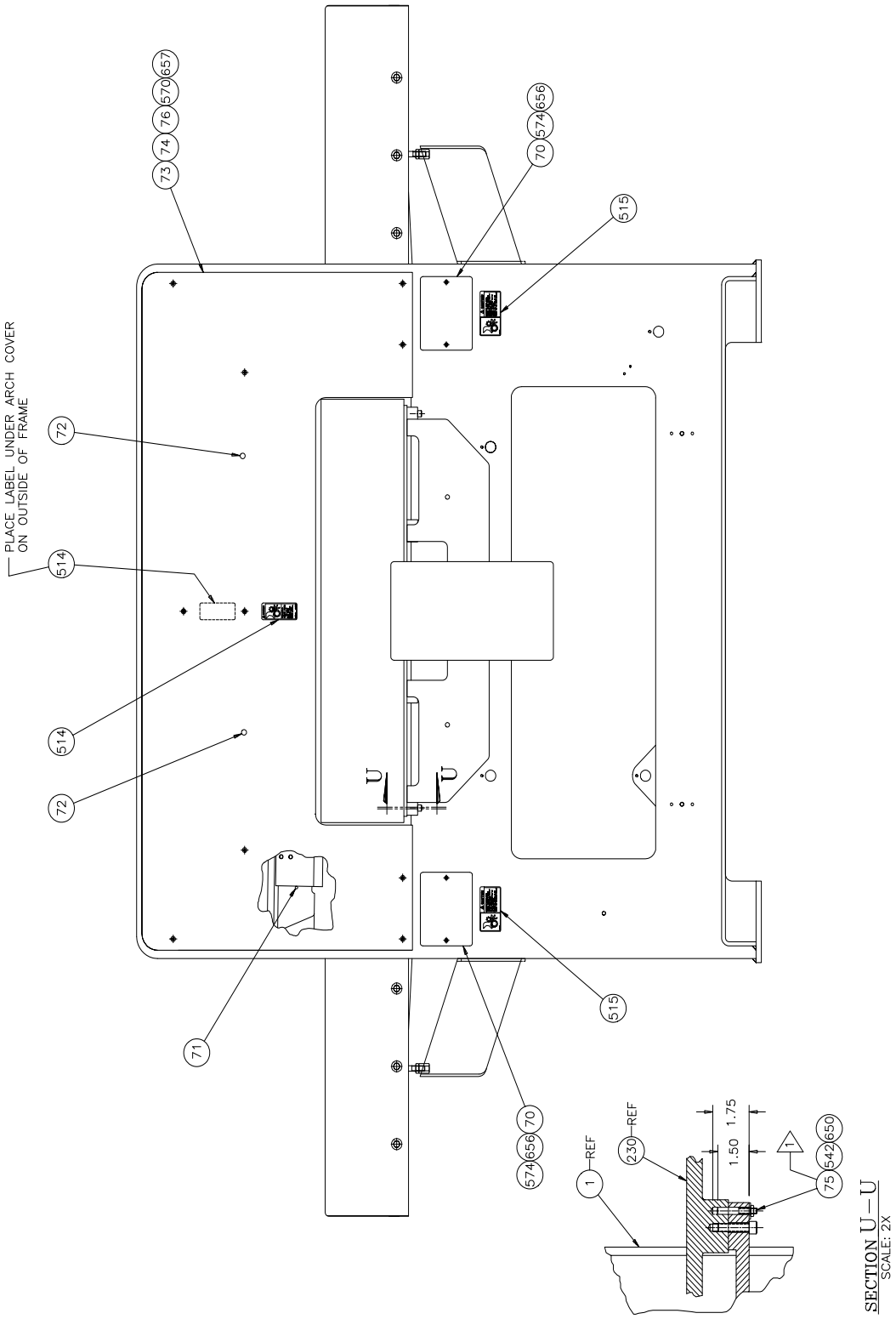

11.5 Main Assembly – Clamp – 49000 Sht. 5 of 14

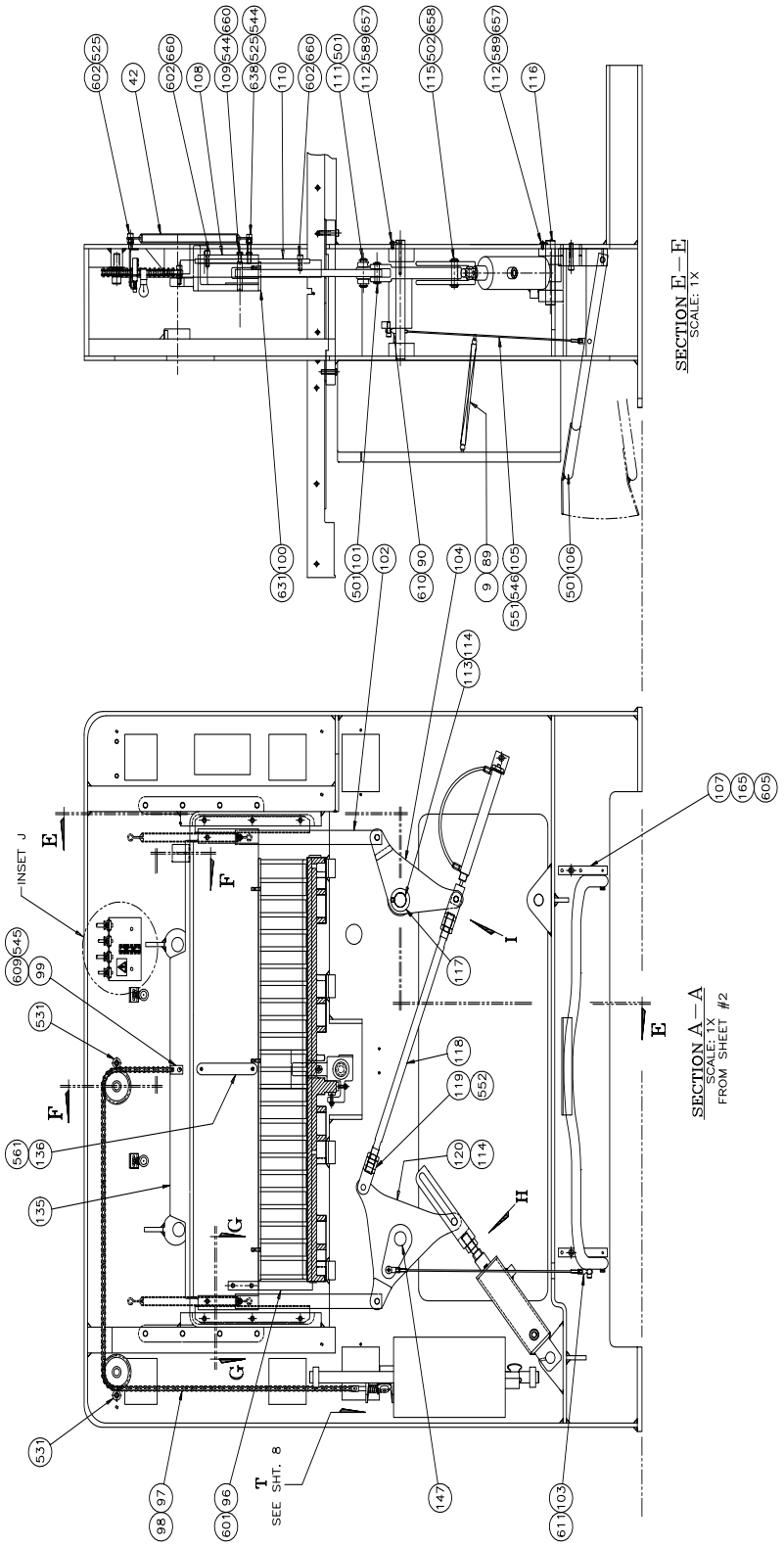

Main Assembly – Clamp – 49000 Sht. 5 of 14 (cont.)

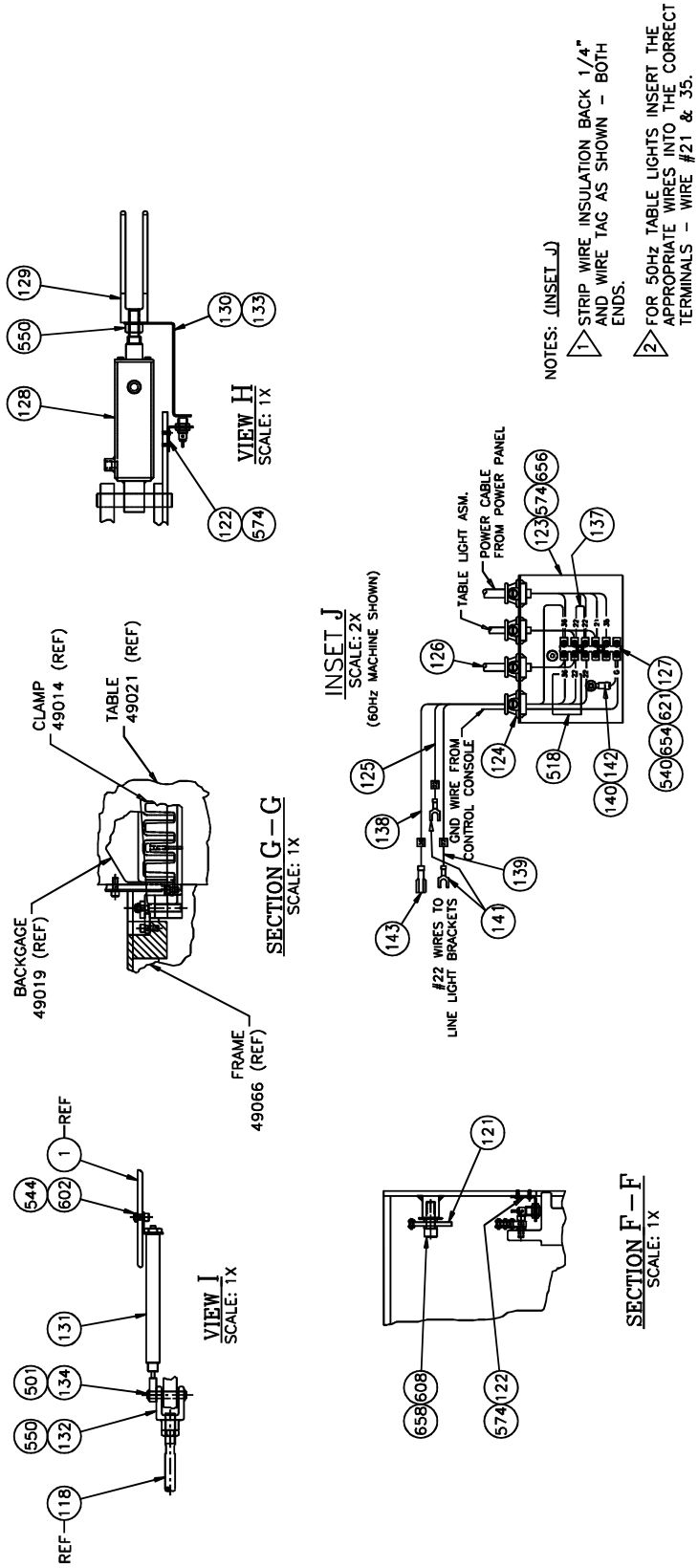

11.6 Main Assembly – Knife – 49000 Sht. 6 of 14

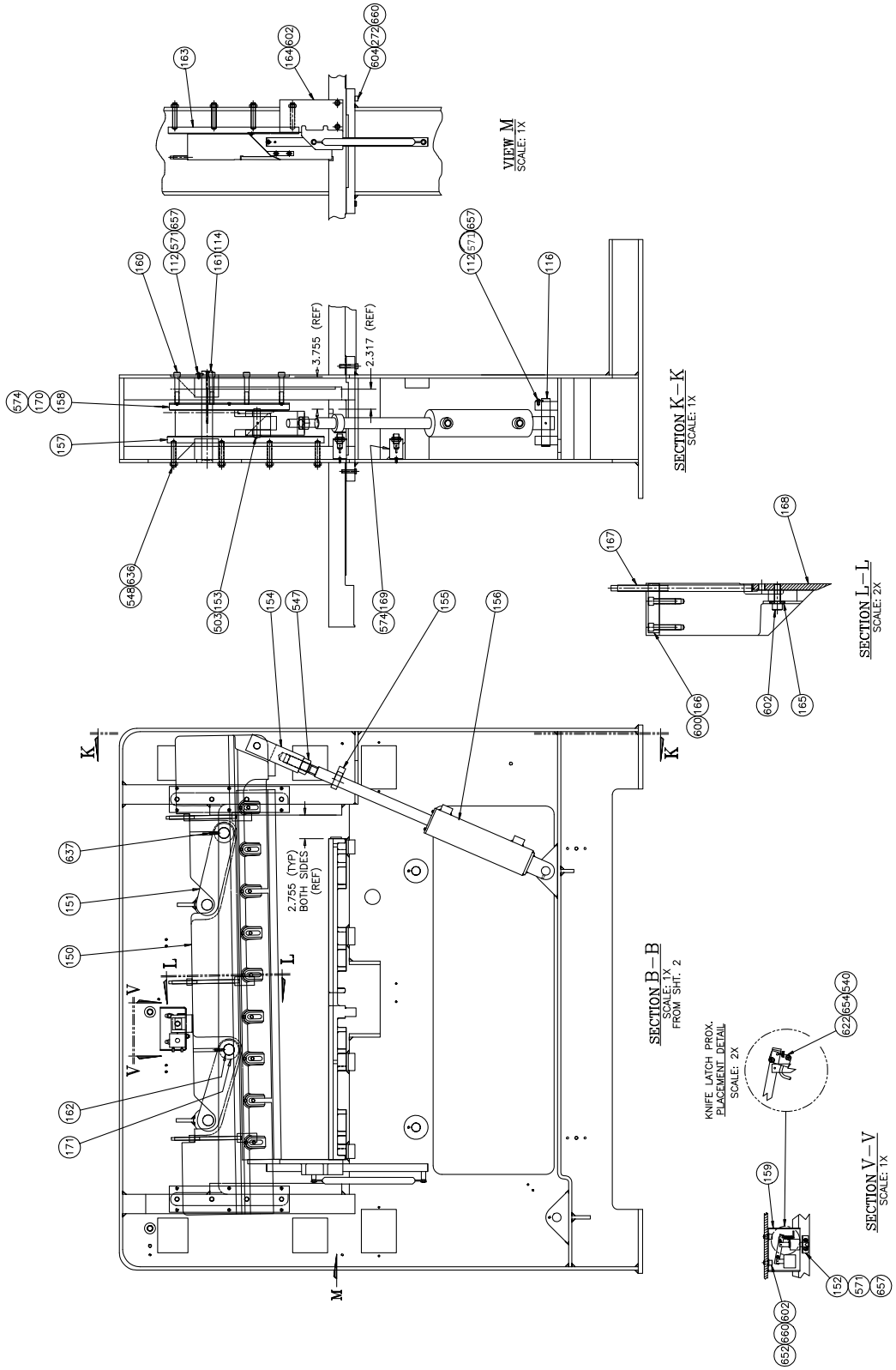

11.7 Main Assembly – Table – 49000 Sht. 7 of 14 Rev. C

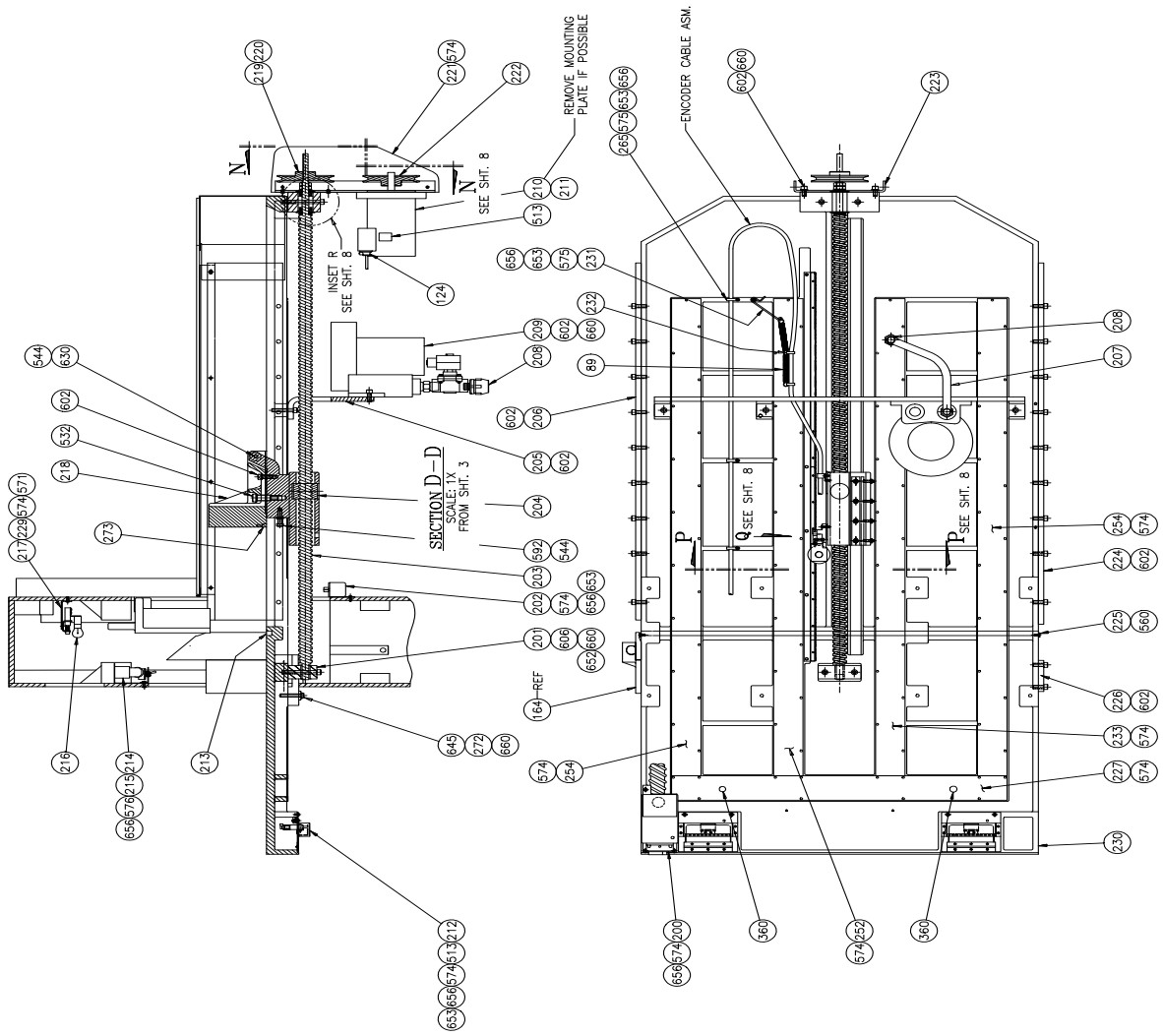

11.8 Main Assembly – Table – 49000 Sht. 8 of 14 Rev. A

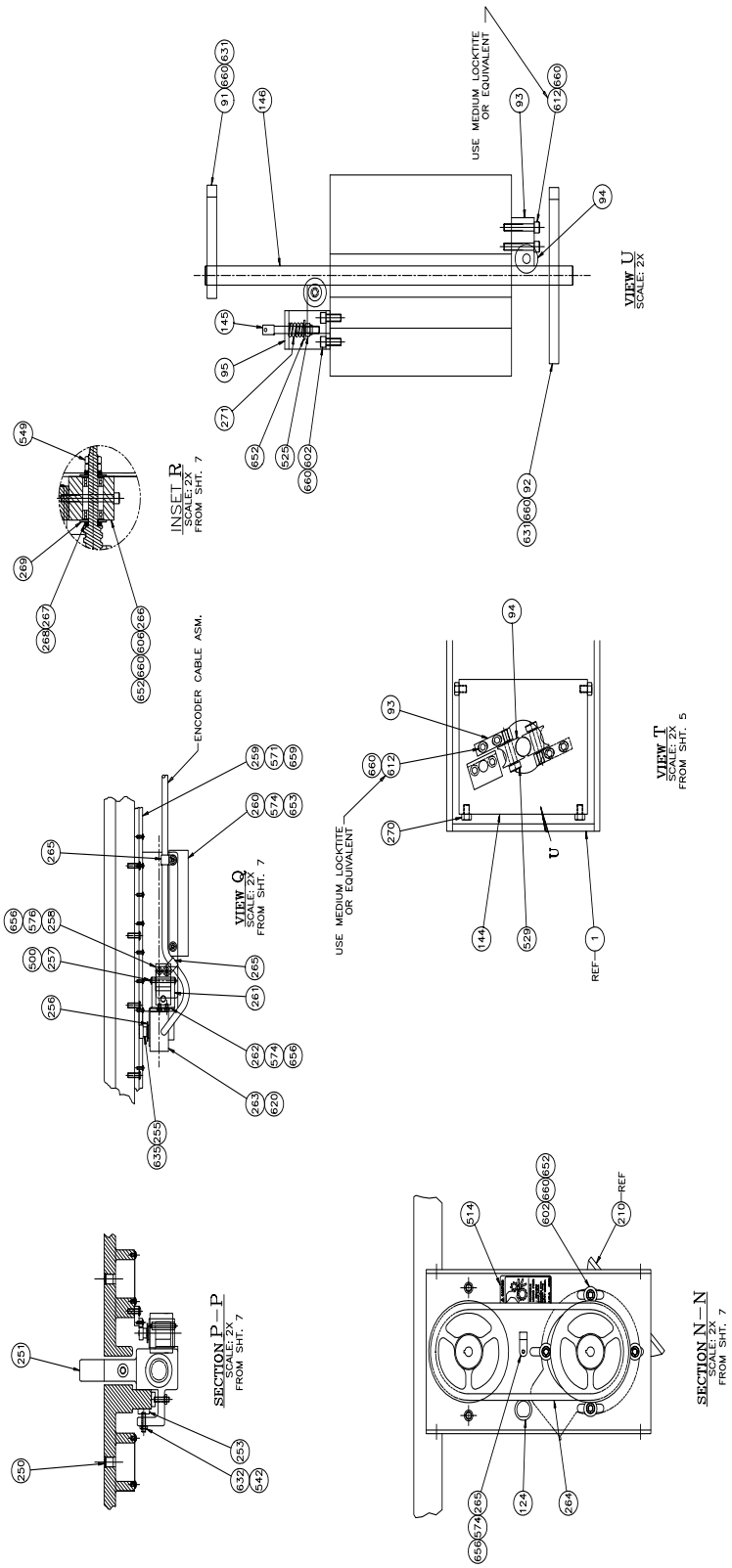

11.9 Main Assembly – Hydraulics – 49000 Sht. 9 of 14 Rev. B

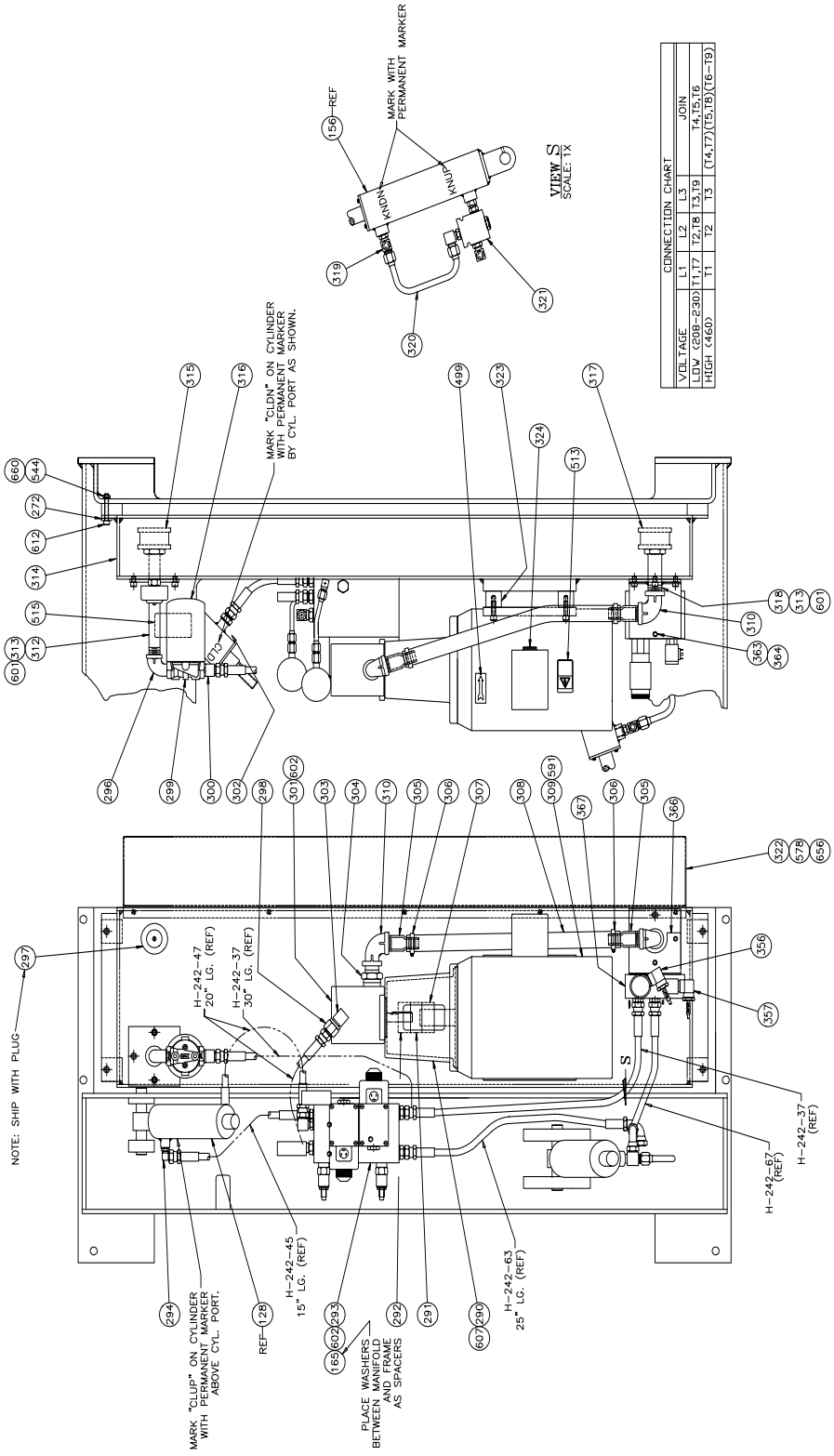

11.10 Final Assembly Wiring – 49000 Sht. 10 of 14 Rev. A

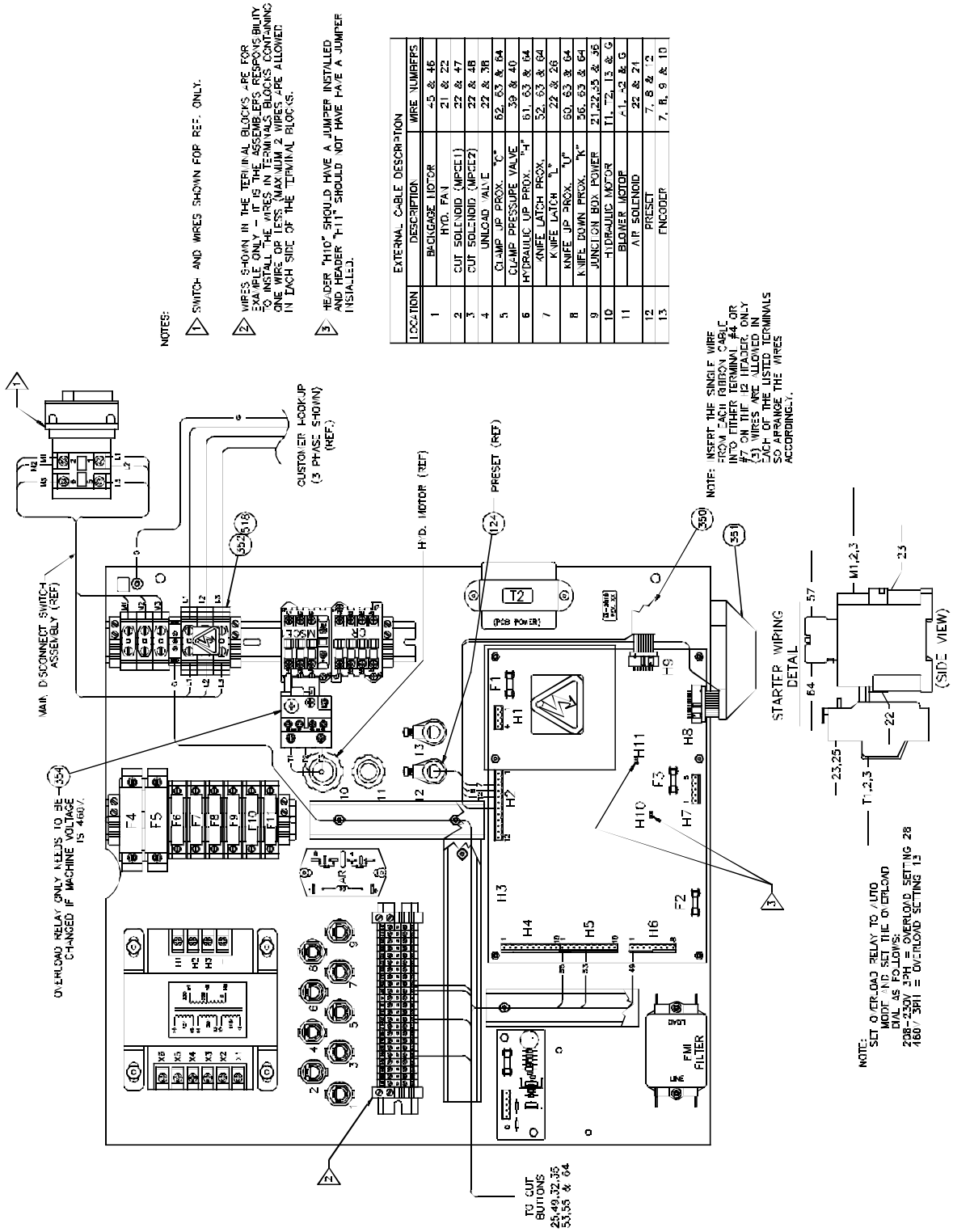

11.11 Final Assembly Wiring – Euro, 230 V – 49000 Sht. 11 of 14

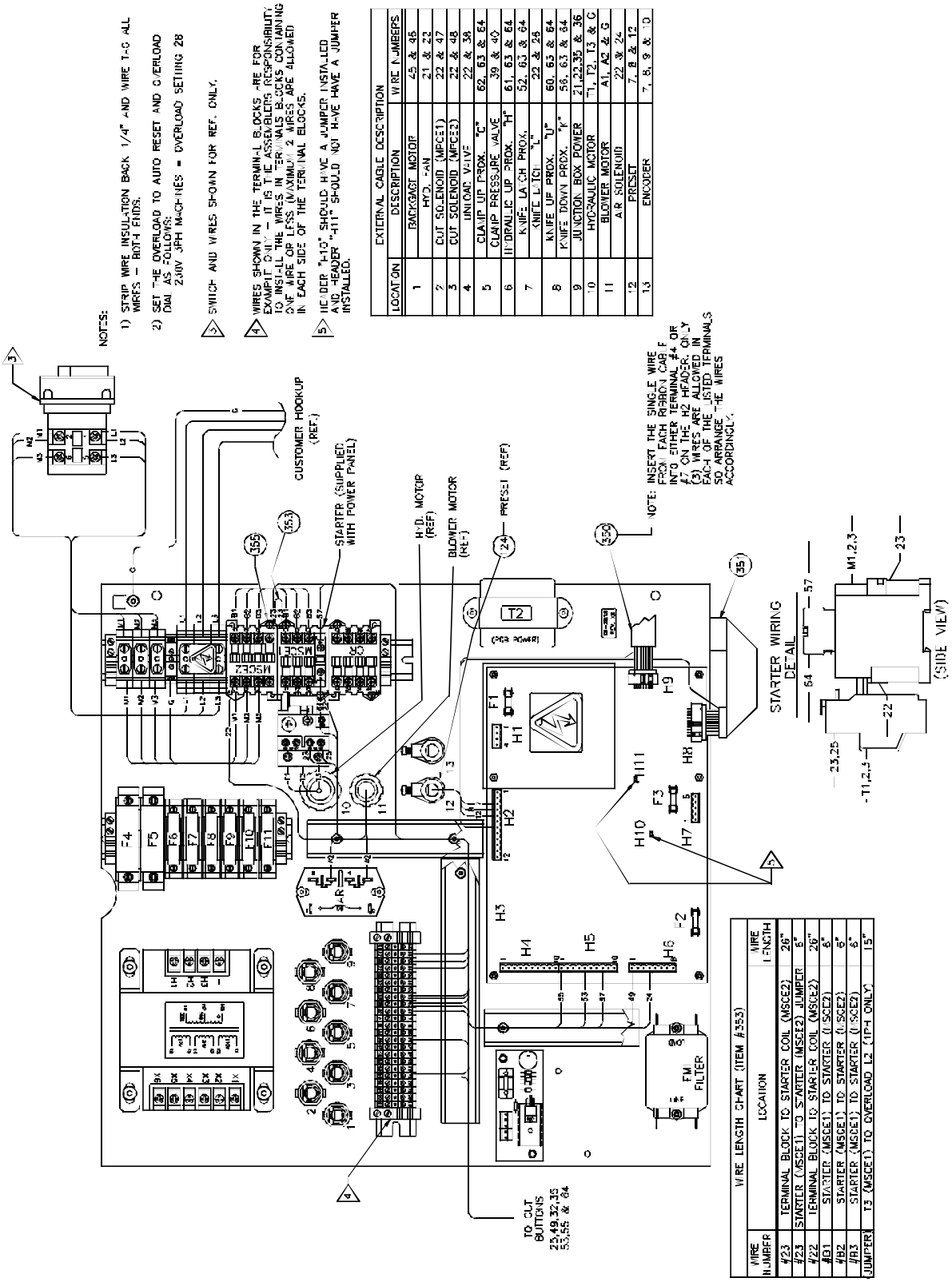

LOCATION	EXTERNAL CABLE DESCRIPTION	
	DESCRIPTION	WIRE NUMBERS
1	BACKSAGE MOTOR	45 & 46
	H.D. FAN	21 & 22
2	CUT SOLENOID (MFCE1)	22 & 47
3	CUT SOLENOID (MFCE2)	22 & 48
4	UNLOAD VALVE	22 & 39
5	CLAMP UP PROX. "C"	62, 63 & 64
	CLAMP PRESSURE VALVE	39 & 40
6	HYDRAULIC UP PROX. "H"	61, 63 & 64
7	KNIFE LATCH PROX.	52, 63 & 64
	KNIFE LATCH "L"	22 & 29
8	KNIFE UP PROX. "U"	60, 63 & 64
	KNIFE DOWN PROX. "K"	56, 63 & 64
9	JUNCTION BOX POWER	21,22,35 & 36
10	HYDRAULIC MOTOR	T1, T2, T3 & G
11	BLOWER MOTOR	A1, A2 & G
	AIR SOLENOID	22 & 24
12	PRESET	7, 8 & 12
13	ENCODER	7, 8, 9 & 10

WIRE NUMBER	WIRE LENGTH CHART (ITEM #353) LOCATION	WIRE LENGTH
#23	TERMINAL BLOCK TO STARTER COIL (MSCE2)	26"
#23	STARTER (MSCE1) TO STARTER (MSCE2) JUMPER	8"
#22	TERMINAL BLOCK TO STARTER COIL (MSCE2)	26"
#B1	STARTER (MSCE1) TO STARTER (MSCE2)	8"
#B2	STARTER (MSCE1) TO STARTER (MSCE2)	8"
#B3	STARTER (MSCE1) TO STARTER (MSCE2)	8"
(JUMPER)	T3 (MSCE1) TO OVERLOAD L2 (1PH ONLY)	15"

11.12 Main Assembly – 380/415/460 Wiring – 49000 Sht. 12 of 14

INSTRUCTIONS:

1. REMOVE THE EXISTING TRANSFORMER IN THE POWER PANEL.
2. MOUNT THE NEW TRANSFORMER (ITEM #1) TO THE BOTTOM OF THE RIGHT SIDE (TYPICAL) OF THE ENCLOSURE USING THE SUPPLIED 1/4-20 HARDWARE.
3. INSTALL THE SUPPLIED ELECTRICAL SHOCK LABEL (ITEM #3) NEAR THE DOOR LOCK ON THE OUTSIDE OF THE RIGHT SIDE DOOR.
4. INSTALL THE (2) SCREW MOUNT TYRAPS AS SHOWN IN THE DETAIL. IT MAY BE NECESSARY TO BACK THE STUDS OUT SLIGHTLY TO ALLOW TYRAP MOUNTING.
5. SECURE THE CONDUIT ASSEMBLY WITH THE (2) TYRAPS (INSTALLED IN STEP 4). (INSERT ONE END OF THE CONDUIT THROUGH THE HOLE IN THE WALL BETWEEN THE POWER PANEL AND THE TRANSFORMER SHOULD BE INSTALLED SO IT IS HANGING ABOUT 2" FROM THE BOTTOM OF THE ENCLOSURE.
6. USING THE TRANSFORMER WIRING DETAIL – INSTALL THE WIRES TO THE NEW TRANSFORMER.
7. REMOVE THE "M1" & "M2" JUMPERS FROM "F8, F9, F10 AND F11" – SAVE FOR LATER USE.
8. INSTALL THE WIRES FROM THE CONDUIT ASSEMBLY TO THE APPROPRIATE LOCATIONS IN THE POWER PANEL AS SHOWN.
9. USING "M" JUMPERS REMOVED EARLIER – RE-LABEL EACH JUMPER TO A "1" AND A "2" AND JUMPER FUSES "F8 & F10" TOGETHER AND "F9 & F11" TOGETHER.
10. REWIRE THE HYDRAULIC MOTOR FOR THE APPROPRIATE VOLTAGE (USE THE MANUFACTURERS WIRING DIAGRAM ON MOTOR)
11. REPLACE THE EXISTING OVERLOAD RELAY WITH THE SUPPLIED OVERLOAD RELAY (ITEM #10)

NOTE:

SET THE OVERLOAD RELAY TO AUTO MODE AND THE DIAL AS FOLLOWS:
380V 3PH = OVERLOAD SETTING 10
415V 3PH = OVERLOAD SETTING 13
460V 3PH = OVERLOAD SETTING 13

REFER TO E-2814 BASIC MACHINE SCHEMATIC

NO.	PART NO.	DESCRIPTION OF ACCESSORIES	QTY
1	E-1089-42	TRANSFORMER – 380/415/460V PRIMARY	1
2	EE-2871	CONDUIT ASSEMBLY – EXT. TRANSFORMER	1
3	S-1781-11	LABEL – EURO SHOCK W/TEXT (NOT SHOWN)	1
4	S-1694	TYRAP	10
5	S-1694-3	TYRAP – SCREW MOUNTED	2
6	H-6910-404	SCREW – 1/4-20 X 1/2" BUT HD SOC CAP	4
7	H-7324-B	WASHER – 1/4" INT. TOOTHLOCK	4
8	H-7321-4	WASHER – 1/4" SAE FLAT	4
9	H-6423-4	NUT – 1/4-20 HEX	4
10	E-2441-11	RELAY – OVERLOAD, 13A TO 19A (T250U19)	REF
	E-2441-13	RELAY – OVERLOAD, 7.5A TO 11A (T250U11)	REF

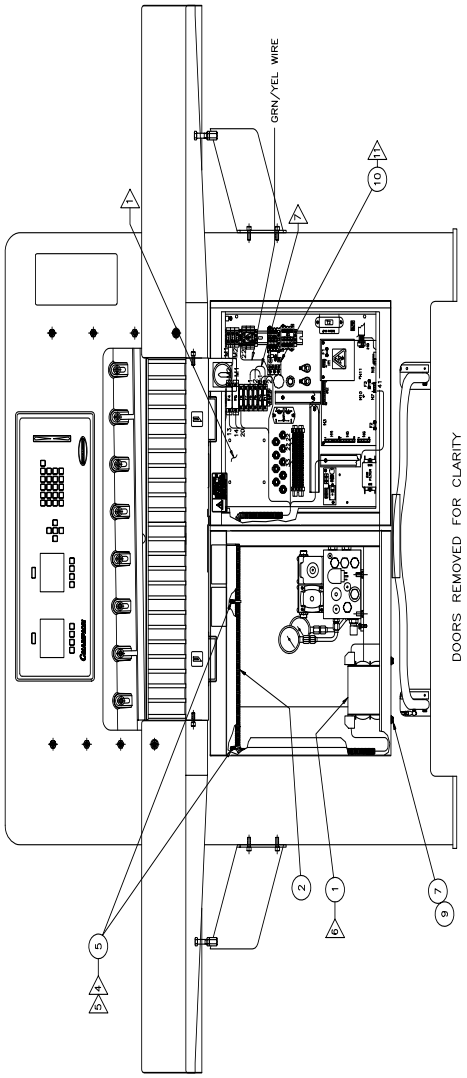

TRANSFORMER WIRING DETAIL
SCALE: 2X
CAUTION: DETAIL SHOWN BELOW IS FOR REF. ONLY
ALWAYS FOLLOW THE LABEL LOCATED ON THE TRANSFORMER AND DOUBLE CHECK WIRING BEFORE POWERING UP THE MACHINE.

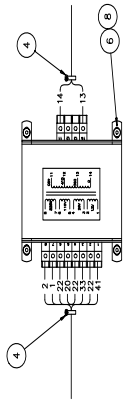

NOTES

11.13 Main Assembly – Bill of Materials – 49000 Sht. 13 of 14 Rev. C

NO.	PART NO.	DESCRIPTION OF ACCESSORIES	SHT	QTY
1	49066	FRAME – MACHINED	1	1
2	47173–1	L.H. DOOR ASM.	1	1
3	47163	GASKET	1	6
4	A–8495	TABLE EXTENSION SUPPORT L.H.	1	1
5	49147	36" SIDE TABLE BACK PLATE L.H.	1	1
6	16026	EXTENSION TABLE – L.H.	1	1
7	EE–2823	CONTROL CONSOLE ASM.	1	1
8	49068	CONSOLE BRACKET	1	2
9	S–1694–2	TIE – CABLE #10	1	5
10	16027	EXTENSION TABLE – R.H.	1	1
11	49080	36" SIDE TABLE BACK PLATE R.H.	1	1
12	A–8496	TABLE EXTENSION SUPPORT R.H.	1	1
13	47033–3	FRONT ENCLOSURE ASM.	1	1
14	49093	R.H. DOOR ASM.	1	1
15	EE–2818	ELECTRICAL PANEL	1	1
16	47101	FRONT ENCLOSURE LATCH	1	2
17	11145–1	BLIND RIVET – 3/16	1	4
18	K–49000	TOOL KIT	1	1
19	A–9121	CUT PLATE	1	2
20	E–2196–11	PLUG – HOLE	1	2
41	40016–3	MOUNT – VIBRATION	2,5	3
42	49112	SPRING	2	1
43	41130	SERIAL PLATE	2	1
44	49088	COVER – ARCH END	2	2
45	49082	SUPPORT – BACKGAGE SHIELD	2	1
55	49064	COVER – REAR TABLE	3	1
56	49081	SHIELD – BACKGAUGE	3	1
57	49072	BRACKET – BACKGAUGE SHIELD	3	2
70	49110	REAR ACCESS COVER	4	2
71	H–5246–406	DOWEL PIN – 1/4 X 3/4	4	1
72	E–2196–6	PLUG – HOLE	4	2
73	49085	ARCH COVER	4	1
74	E–1152–70	STANDOFF – 1/4–20 MALE TO 1/4–20 FEMALE	4	10
75	44055	PIN – SPECIAL TAPER	4	2
76	7032–M	PLASTIC TRIM – 12 FEET	4	1
89	8657	SPRING	5,7	3
90	49149	ROD END – BALL JOINT R.H FEMALE THD.	5	1
91	49133	SUPPORT BAR – COUNTER WEIGHT	8	1
92	49134	SUPPORT BAR – COUNTER WEIGHT	8	1
93	49135	MOUNTING BLOCK	8	2
94	49136	FOLLOWER – COUNTER WEIGHT SHAFT	8	2
95	49137	C SHAPED CHANNEL	8	1
96	49007	PAPER DEFLECTOR	5	1
97	49132	CHAIN – ROLLER	5	1
98	20017	LINK – MASTER	5	2
99	49140	CONNECTING LINK – COUNTER WEIGHT	5	1
100	49012	FALSE CLAMP PLATE WELDMENT	5	1
101	49043	PIN – BELLCRANK / TIE ROD (ø.5000)	5	1
102	49008	CLAMP PULL DOWN BAR	5	2
103	49150	ROD END – BALL JOINT L.H. FEMALE THD.	5	1
104	49002	BELLCRANK – RIGHT HAND	6	1
105	49017	CABLE – FOOT PEDAL	5	1
106	49015	FOOT PEDAL WELDMENT	5	1
107	49016	PIVOT BRACKET ASM.	5	2
108	49009	GIB – CLAMP GUIDE	5	2
109	49010	STUD – CLAMP PULL DOWN BAR (ø.5000)	5	2
110	49006	BAR – CLAMP GUIDE	5	2
111	49037	PIN – BELLCRANK / PULL DOWN BAR (.5000)	5	2
112	8835	PIN KEEPER	5	6
113	49190	PIN – BELLCRANK (ø1.2500)	5	1

NO.	PART NO.	DESCRIPTION OF ACCESSORIES	SHT	QTY
114	S–1725	GREASE FITTING	5	4
115	49045	PIN – BELLCRANK / CYLINDER CLEVIS (ø.6250)	5	1
116	49036	PIN – CYLINDER (ø1.000)	5,6	2
117	A–10644–8	COLLAR	5	1
118	49011	TIE ROD – BELLCRANK	5	1
119	49078	CLEVIS – BELLCRANK / TIE ROD L.H.	5	1
120	49001	BELLCRANK – LEFT HAND	5	1
121	20008	SPROCKET	5	2
122	49125	PROX BRACKET – CLAMP	5	2
123	47195	BRACKET – ARCH JUNCTION	5	1
124	S–1350–16	BUSHING	–	7
125	E–709–R	WIRE – #18 GA. RED MTW 22" LONG (#22)	5	1
126	EE–2848	CABLE ASM. – LCD BACK LITE	5	1
127	E–2626–6	TERMINAL BLOCK – 6 POLE	5	1
128	H–499	CYLINDER – CLAMP	5	1
129	49005	CLEVIS – CLAMP CYLINDER	5	1
130	49101	PROXIMITY ACTUATOR – CLAMP CYL. DOWN	5	1
131	49109	DAMPER ASM.	5	1
132	49142	CLEVIS – BELLCRANK / TIE ROD R.H.	5	1
133	H–21S–125–0500	ROLL PIN – 1/8 DIA. X 1/2	5	1
134	49030	PIN – BELLCRANK / TIEROD R.H. (ø.5000)	5	1
135	49014	CLAMP	5	1
136	49047	CLAMP WEAR STRIP	5	1
137	E–709–R	WIRE – #18 GA. RED MTW 3" LONG (#22)	5	1
138	E–709–R	WIRE – #18 GA. RED MTW 20" LONG (#36)	5	1
139	E–709–R	WIRE – #18 GA. RED MTW 6" LONG (#22)	5	1
140	E–2743	WIRE – #18 GA. GRN/YEL MTW 3" LONG	5	1
141	E–1214–4	CONNECTOR – #8 INS. LOCKING FORK (16–22)	5	2
142	E–1214–8	CONNECTOR – #10 INS. RING (16–22)	5	1
143	E–1214–54	CONNECTOR – 1/4" FULLY INS. MALE QUICK DISC.	5	1
144	49138	COUNTER WEIGHT	8	1
145	49139	CONNECTING LINK – COUNTER WEIGHT	8	1
146	49153	SHAFT – COUNTER WEIGHT	8	1
147	49191	PIN – BELLCRANK (ø1.2500)	5	1
150	49053	KNIFE BAR	6	1
151	49054	KNIFE BAR LINK	6	2
152	49187	KNIFE LATCH BRACKET	6	1
153	49032	PIN – KNIFE CLEVIS (ø.7500)	6	1
154	49077	CLEVIS – KNIFE CYLINDER	6	1
155	47125	CAM ASM. – KNIFE CYLINDER	6	1
156	H–500	KNIFE CYLINDER	6	1
157	49051	GIB – KNIFE BAR – FRONT R.H.	6	1
158	49124	GIB – KNIFE BAR – REAR	6	2
159	47568	KNIFE LATCH ASSEMBLY	6	1
160	49122	SCREW – REAR KNIFE GIB DEPTH	6	8
161	49035	PIN – KNIFE LINK / FRAME (ø1.2500)	6	2
162	49033	PIN – KNIFE LINK / KNIFE BAR (ø1.2500)	6	2
163	49128	GIB – KNIFE BAR – FRONT L.H.	6	1
164	49115	PAPER DEFLECTOR	6	1
165	8815	WASHER – KNIFE BAR SCREW	–	18
166	49144	BRACKET – KNIFE ADJUSTING SCREW	6	3
167	49145	KNIFE ADJUSTING SCREW	6	3
168	49055	KNIFE	6	2
169	49097	PROX BRACKET – KNIFE	6	2
170	49123	LOCATOR PLATE – REAR GIB	6	2
171	49158	SHIM – WASHER	6	4
200	EE–2831	MAIN POWER DISCONNECT SWITCH ASSEMBLY	7	1
201	49098	FRONT PILLOW BLOCK ASM.	7	1
202	EE–2817	PRESET CONTROL ASM.	7	1
203	49027	LEADSCREW	7	1
204	49041	NUT – LEADSCREW	7	1
205	49026	TABLE BRACE	7	1
206	49023	PAPER GUIDE – REAR TABLE – R.H.	7	1
207	E–2189–2	TUBING – CORRUGATED, FLEXIBLE 3/4" X 32" LONG	7	1

NO.	PART NO.	DESCRIPTION OF ACCESSORIES	SHT	QTY
208	E–2191–2	PLASTIC LIQUID TIGHT CONNECTOR	7	2
209	49083	BLOWER ASSEMBLY	7	1
210	E–1600–149	MOTOR	7	1
211	E–1237–1	WIRE NUT – YELLOW	7	2
212	EE–2832	CUT BUTTON ASM.	7	1
213	4173	CUT STICK	7	4
214	EE–2149–11	TABLE LIGHT ASM.	7	1
215	S–845	LIGHT – TABLE	7	1
216	E–967–1	LAMP – LINE LIGHT	7	2
217	EE–2779	LINE LIGHT ASM.	7	2
218	49019	BACKGAUGE	7	1
219	A–12616–1	PULLEY – DRIVEN	7	1
220	49004	KEY – 1/8 X 1/8 X 3/4	7	1
221	47055	COVER – BACKGAUGE DRIVE	7	1
222	13927–1	PULLEY – DRIVE	7	1
223	47054	BACKGAUGE MOTOR BRACKET	7	1
224	49039	PAPER GUIDE – REAR TABLE – L.H.	7	1
225	5–6–27B	STOP – CUT STICK	7	2
226	49022	PAPER GUIDE – FRONT TABLE – R.H.	7	1
227	49074	AIR CHANEL COVER – SHORT	7	1
229	49129	LINE LIGHT BRACKET	7	2
230	49021	TABLE	7	1
231	8658–1	SPRING RETAINER	7	1
232	S–1694–1	TIE – CABLE	7	3
233	49169	AIR CHANNEL COVER	7	1
250	P–207–1	AIR JET	8	48
251	49034	BACKGAUGE NUT	8	1
252	49084	AIR CHANNEL COVER	8	1
253	49046	GIB – BACKGAUGE CARRIER	8	2
254	49073	AIR CHANNEL COVER – LONG	8	2
255	8230	PINION – ENCODER	8	1
256	47177	ENCODER SHIELD	8	1
257	47191	PIN – ENCODER (ø.1875)	8	1
258	47193	BRACKET – ENCODER MOUNT	8	1
259	49100	RACK ASM.	8	1
260	49090	TRIGGER – PRE–SETTER	8	1
261	47192	BRACKET – ENCODER	8	1
262	49096	BRACKET – ENCODER	8	1
263	E–2468	ENCODER (5 VOLT DC)	8	1
264	47536	V–BELT	8	1
265	E–968–2	CLIP – WIRE	7,8	6
266	49099	PILLOW BLOCK ASM. – REAR	8	1
267	S–1300–4	NEEDLE THRUST BEARING	8	2
268	S–1295–8	THRUST WASHER	8	4
269	47503	WASHER – PILLOW BLOCK	8	2
270	H–6881–606	BOLT – 3/8–16 X 3/8 NYLON HEX HD.	8	4
271	35048–15	DIE SPRING	8	1
272	49172	HARDENED WASHER – EXTRA THICK	6,7	8
273	10065	PIN – BACKGUAGE	7	12

11.14 Main Assembly – Bill of Materials – 49000 Sht. 14 of 14 Rev. G

NO.	PART NO.	DESCRIPTION OF ACCESSORIES	SHT	QTY
290	49146	C-FACE MOTOR / PUMP ADAPTER	9	1
291	49151	BRUNA-N SPIDER	9	1
292	49152-1	SPIDER COUPLING 3/4 DIA. BORE	9	1
293	H-512	MANIFOLD ASM.	9	1
294	H-230-6	ELBOW – O-RING TO TUBE (849-FSO-8x6)	9	2
296	H-5511-12	ELBOW – STREET 90° – 3/4 NPT TO 3/4 NPT	9	1
297	H-287-2	BREATHER	9	1
298	H-514-10x8	TUBE REDUCER – #10 TO #08 (2406-10-8-NWO)	9	1
299	H-226-1	FILTER HEAD	9	1
300	H-515-8x12	ADAPTER – TUBE TO NPT (848-FS-8x12)	9	1
301	H-513	PUMP – V20 7 GPM (PART # V20-1P7S-1D)	9	1
	49192	PUMP – V20 8 GPM (FOR 50 Hz MACHINE)	9	1
303	H-230-9	ELBOW – O-RING TO TUBE (849-FSO-10x12)	9	1
304	H-256-3	PIPE ADAPTER– 1-1/4 TO 1, NPT (24SA-20x16)	9	1
305	H-491	HOSE BARB – ZINGA	9	2
306	H-489	HOSE CLAMP	9	2
307	49152-2	SPIDER COUPLING – 1-3/8 DIA. BORE	9	1
308	H-242-62	HOSE – 1" I.D. X 22" LOW PRESSURE	9	1
309	EE-1600-138	LEESON MOTOR 10 HP (PART # 150172)	9	1
310	H-5510-16	ELBOW 90° – 1" NPT TO 1" NPT	9	2
312	49111	PLATE – RESEVOIR COVER	9	1
313	49075	GASKET	9	2
314	49141	HYDRAULIC RESIVOIR	9	1
315	H-238-4	STRAINER	9	1
316	H-227-1	FILTER	9	1
317	H-338	DIFFUSER – RETURN LINE	9	1
318	49069	PLATE – RESIVOIR COVER	9	1
319	H-435-1	TEE – O-RING TO TUBE TO TUBE (851-FSO-8x8)	9	1
320	H-510	TUBE ASM. – #8 TUBE TO #8 TUBE	9	1
321	H-509	CHECK VALVE ASM.	9	1
322	49155	COOLING FAN ASM.	9	1
323	40016-5	MOUNT – VIBRATION	9	4
324	E-2873	BUSHING – REDUCER, CONDUIT	9	1
350	EE-2855	CABLE ASSEMBLY – SHIELDED RIBBON 14 COND.	10,11	1
351	EE-2855-1	CABLE ASSEMBLY – SHIELDED RIBBON 20 COND.	10,11	1
353	EE-2846	WIRE ASSEMBLY – EURO STARTER	11	1
355	E-2805-1	STARTER (EURO CUTTER ONLY)	11	1
356	EE-2906	CABLE ASSEMBLY – SOLENOID (VALVE)	9	REF
357	EE-2906-1	CABLE ASSEMBLY – SWITCH	9	REF
360	H-6650-6	PLUG – PLASTIC NPT	7	2
361	H-242-37	HOSE – HYDRAULIC, 30" LONG	9	REF
362	H-242-67	HOSE – HYDRAULIC, 22" LONG	9	REF
363	H-6913-606	BOLT – 3/8-16 X 3/4 HEX HD	9	2
364	H-7327-12	WASHER – 3/8 LOCKWASHER	9	2
366	49193	BRACKET – VALVE	9	1
367	49195	VALVE ASSEMBLY – KNIFE FLOW CONTROL	9	1
499	S-1106	LABEL – RED ARROW	9	1
500	S-1193-18	ERING – 3/16	8	2
501	S-1193-50	ERING – 1/2	5	10
502	S-1193-62	ERING – 5/8	5,6	2
503	S-1193-75	ERING – 3/4	6	2

NO.	PART NO.	DESCRIPTION OF ACCESSORIES	SHT	QTY
510	S-1781-8	LABEL	1	1
511	S-1781-11	LABEL – SHOCK HAZARD	1,2	2
513	S-1781-12	LABEL – ELECTRICAL SHOCK HAZARD	7,9	4
514	S-1781-15	LABEL	2,4,8	5
515	S-1781-16	LABEL – CRUSH HAZARD	1,4,9	4
517	S-1781-25	LABEL – INSTRUCTION	1	1
518	S-1781-50	LABEL – SHOCK HAZARD "EURO"	–	4
519	S-1781-52	LABEL – POWER CONNECTION PROCEDURE	1	1
525	H-5247-6	FLEX LOCK NUT – 3/8-16	2	5
529	H-5254-610	SHOULDER SCREW – 3/8 DIA. X 1-1/4 SOC. HD.	8	2
530	H-5254-608	SHOULDER SCREW – 3/8 DIA. X 1 SOC. HD.	2,8	2
531	H-5254-822	SHOULDER SCREW – 1/2 X 2-3/4 SOC. HD.	5	2
532	H-5254-1010	SHOULDER SCREW – 5/8 X 1-1/4 SOC. HD.	7	1
540	H-6423-#4	NUT – #4-40 HEX	5,6	4
541	H-6423-#10	NUT – #10-24 HEX	1	3
542	H-6423-4	NUT – 1/4-20 HEX	1,4,8	20
543	H-6423-5	NUT – 5/16-18 HEX	2	2
544	H-6424-6	NUT – 3/8-16 HEX JAM	–	21
545	H-6424-8	NUT – 1/2-13 HEX JAM	5	1
546	H-6427-5	NUT – 5/16-24 HEX	5	1
547	H-6427-16	NUT – 1-14 HEX	6	1
548	H-6428-8	NUT – 1/2-20 HEX JAM	6	8
549	H-6428-10	NUT – 5/8-18 HEX JAM	8	2
550	H-6428-12	NUT – 3/4-16 HEX JAM	5	2
551	H-6434-5	NUT – 5/16-24 L.H. HEX JAM	5	1
552	H-6434-12	NUT – 3/4-16 L.H. HEX	5	1
560	H-6909-83203	SCREW – #8-32 X 3/8 FLT. HD.	7	2
561	H-6897-102403	SCREW – #10-24 X 3/8 NYLOC F.H.S.C.	5	2
570	H-6910-403	SCREW – 1/4-20 X 3/8 BUTT. HD.	2,4	14
571	H-6910-404	SCREW – 1/4-20 X 1/2 BUTT. HD.	–	19
573				
574	H-6910-102403	SCREW – #10-24 X 3/8 BUTT. HD.	–	126
575	H-6910-102404	SCREW– #10-24 X 1/2 BUTT. HD.	1,3,7	27
576	H-6910-102406	SCREW – #10-24 X 3/4 BUTT. HD.	7,8	4
577	H-6910-102408	SCREW – #10-24 X 1 BUTT. HD.	1	3
578	H-6910-406	SCREW – 1/4-20 X 3/4 BUTT HD.	9	5
590	H-6913-608	BOLT – 3/8-16 X 1 HEX HD.	1	10
591	H-6913-610	BOLT – 3/8-16 X 1-1/4 HEX HD.	9	4
592	H-6913-612	BOLT – 3/8-16 X 1-1/2 HEX HD.	7	1
593	H-6913-818	BOLT – 1/2-13 X 2-1/4 HEX HD.	1	2
600	H-6918-508	SCREW – 5/16-18 X 1 SHCS	6	6
601	H-6918-605	SCREW – 3/8-16 X 5/8 SHCS	5,9	10
602	H-6918-608	SCREW – 3/8-16 X 1 SHCS	–	68
603	H-6918-610	SCREW – 3/8-16 X 1-1/4 SHCS	5,9	4
604	H-6918-612	SCREW – 3/8-16 X 1-1/2 SHCS	6,7	4
605	H-6918-616	SCREW – 3/8-16 X 2 SHCS	5	6
606	H-6918-628	SCREW – 3/8-16 X 3-1/2	7,8	4
607	H-6918-806	SCREW – 1/2-13 X 3/4 SHCS	9	4
608	H-6918-1016	SCREW – 5/8-11 X 2 SHCS	5	2
609	H-6918-810	SCREW – 1/2-13 X 1-1/4 SHCS	5	1
610	H-6915-508	SCREW – 5/16-24 X 1 SHCS	5	1
611	H-6915-512	SCREW – 5/16-24 X 1-1/2 SHCS	5	1
612	H-6918-620	SCREW – 3/8-16 X 2-1/4 SHCS	8	8

NO.	PART NO.	DESCRIPTION OF ACCESSORIES	SHT	QTY
620	H-6921-44004	SCREW – #4-40 X 1/4 FILL. HD.	8	4
621	H-6922-44012	SCREW – #4-40 X 3/4 FLAT HD.	5	2
622	H-6923-44012	SCREW – #4-40 X 3/4 RD. HD.	6	2
623	H-6924-004	SCREW – #0 X 1/4 RD. HD. DR.	2	2
630	H-6931-614	SET SCREW – 3/8-16 X 1-3/4 SQ. HD.	7	2
631	H-6938-404	SET SCREW – 1/4-20 X 1/4 SOC. HD.	5,8	5
632	H-6938-420	SET SCREW – 1/4-20 X 1-1/4 OVAL PT.	8	8
633	H-6938-532	SET SCREW – 5/16-18 X 2 CUP PT. SOC.	2	1
634	H-6940-416	SET SCREW – 1/4-20 X 1 FLT. PT.	1	6
635	H-6964-63202	SET SCREW – #6-32 X 1/8 BRASS TIP	8	1
636	H-6970-848	SET SCREW – 1/2-20 X 3 OVAL PT.	6	8
637	H-6975-404	SET SCREW – 1/4-20 X 1/2 NYLOC CUP PT.	6	2
638	H-6931-618	SET SCREW – 3/8-16 X 2-1/4 SQ HD.	5	1
637	H-6931-618	SET SCREW – 3/8-16 X 2-1/4 SQ. HD.	5	2
645	H-6979-616	SCREW – 3/8-16 X 2 LOW HD. SOC. CAP	7	4
650	H-7321-4	WASHER – 1/4 PLAIN	4	2
651	H-7321-5	WASHER – 5/16 PLAIN	2	2
652	H-7321-6	WASHER – 3/8 PLAIN	–	15
653	H-7321-#10	WASHER – #10 PLAIN	7,8	14
654	H-7324-#4	WASHER – #4 INT. TOOTH	5,6	4
655				
656	H-7324-#10	WASHER – #10 INT. TOOTH	–	34
657	H-7324-8	WASHER – 1/4 INT. TOOTH	–	32
658	H-7324-20	WASHER – 5/8 PLAIN	5	2
660	H-7327-12	WASHER – 3/8 LOCK	–	60

11.15 Interconnection Diagram – E-2870

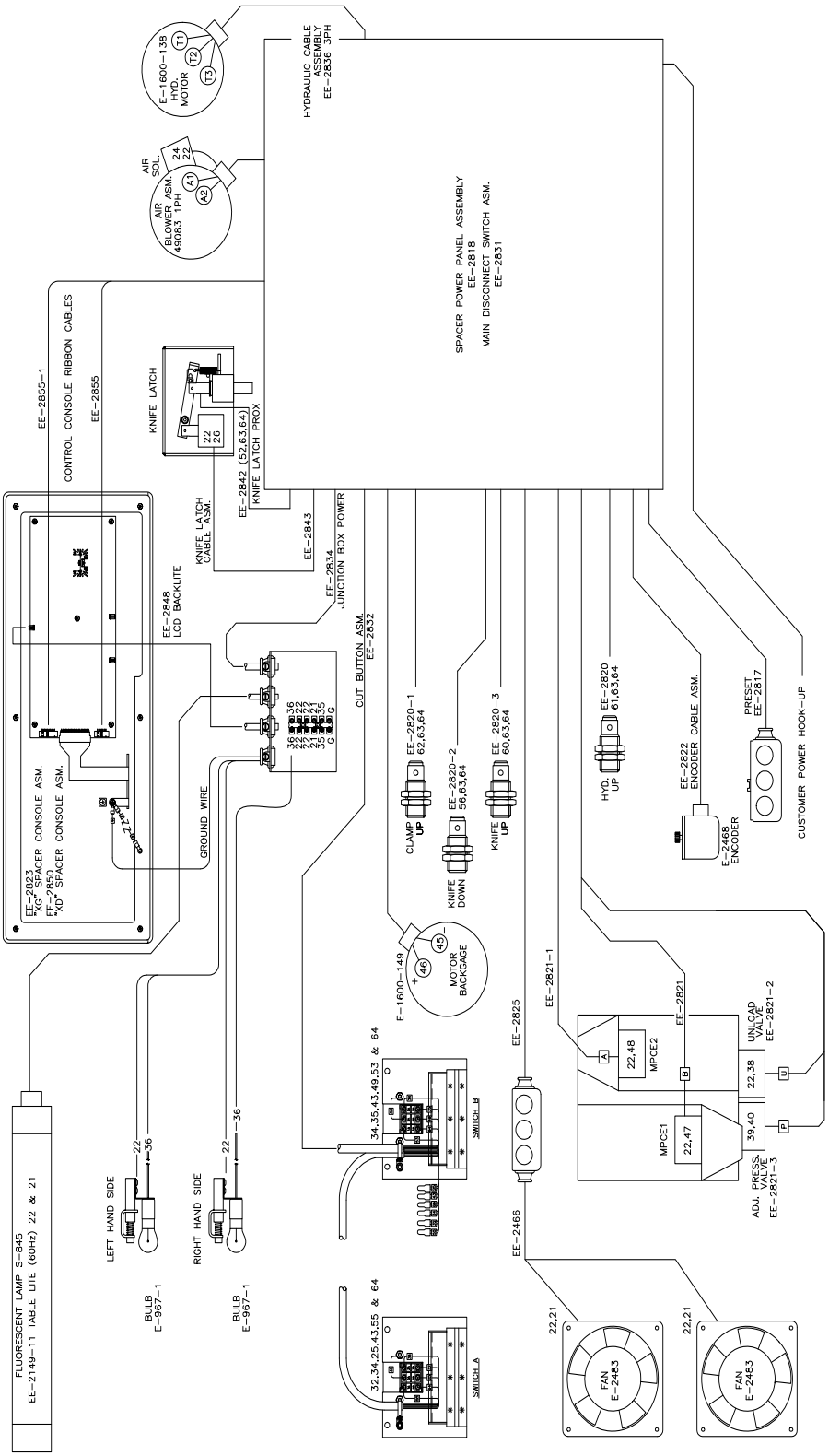

11.16 Machine Schematic – EE-2814 Rev. E

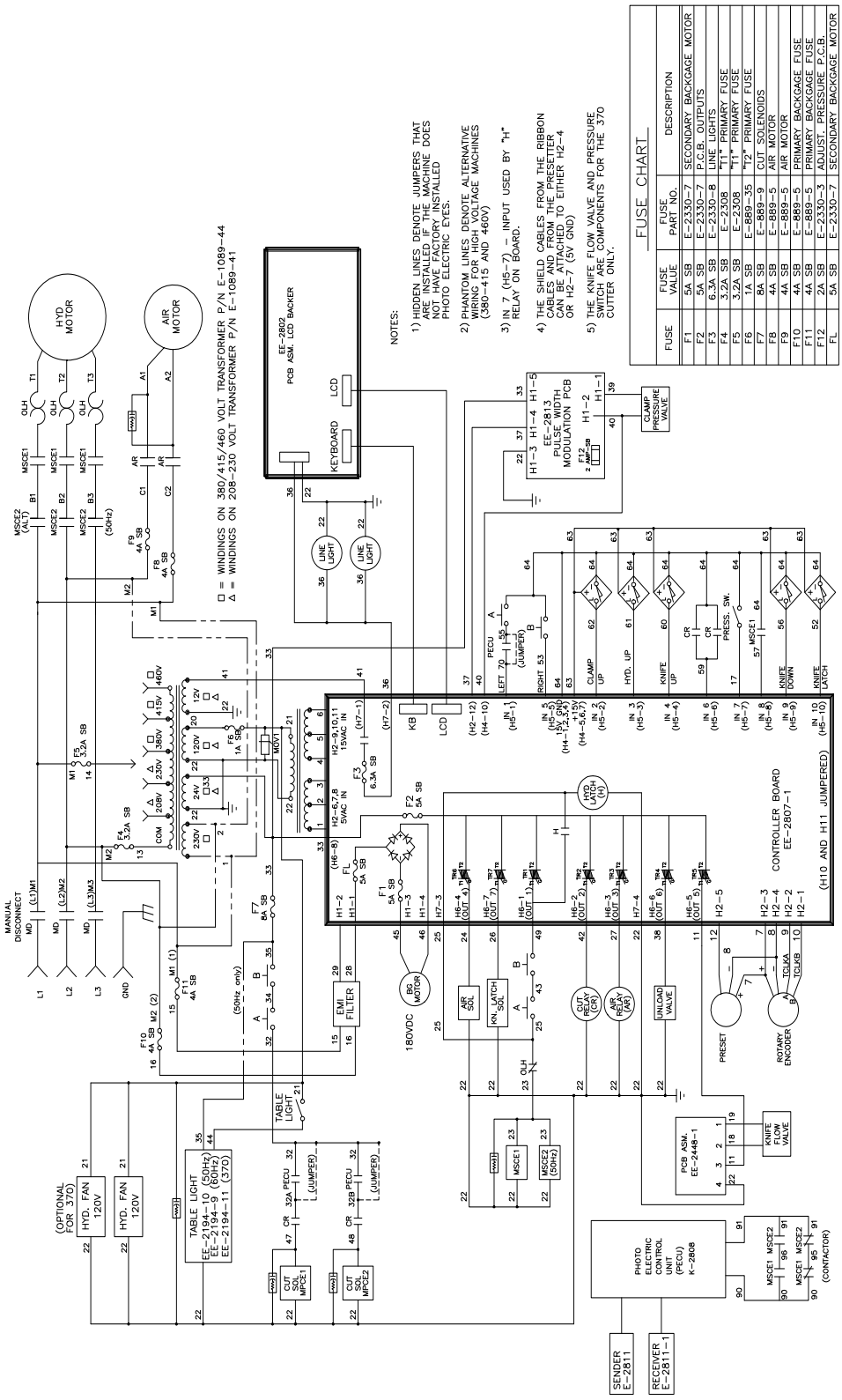

FUSE CHART

FUSE	FUSE VALUE	FUSE PART NO.	DESCRIPTION
F1	5A SB	E–2330–7	SECONDARY BACKGAGE MOTOR
F2	5A SB	E–2330–7	P.C.B. OUTPUTS
F3	6.3A SB	E–2330–8	LINE LIGHTS
F4	3.2A SB	E–2308	"T1" PRIMARY FUSE
F5	3.2A SB	E–2308	"T1" PRIMARY FUSE
F6	1A SB	E–889–35	"T2" PRIMARY FUSE
F7	8A SB	E–889–9	CUT SOLENOIDS
F8	4A SB	E–889–5	AIR MOTOR
F9	4A SB	E–889–5	AIR MOTOR
F10	4A SB	E–889–5	PRIMARY BACKGAGE FUSE
F11	4A SB	E–889–5	PRIMARY BACKGAGE FUSE
F12	2A SB	E–2330–3	ADJUST. PRESSURE P.C.B.
FL	5A SB	E–2330–7	SECONDARY BACKGAGE MOTOR

11.17 Fuse Chart

Fuse	Fuse Value	Fuse Pt. No.	Description
F1	5 AMP Slo-Blo	E-2330-7	Secondary Backgauge
F2	5 AMP Slo-Blo	E-2330-7	P.C.B. Outputs
F3	6.3 AMP Slo-Blo	E-2330-8	Line Lights
F4	3.2 AMP Slo-Blo	E-2308	“T1” Primary Fuse
F5	3.2 AMP Slo-Blo	E-2308	“T1” Primary Fuse
F6	1 AMP Slo-Blo	E-889-35	“T2” Primary Fuse
F7	8 AMP Slo-Blo	E-889-9	Cut Solenoids
F8	4 AMP Slo-Blo	E-889-5	Air Motor
F9	4 AMP Slo-Blo	E-889-5	Air Motor
F10	4 AMP Slo-Blo	E-889-5	Primary Backgauge Motor
F11	4 AMP Slo-Blo	E-889-5	Primary Backgauge Motor
F12	2 AMP Slo-Blo	E2330-3	Adjustable Pressure P.C.B.
FL	5 AMP Slo-Blo	E-2330-7	Secondary Backgauge

11.18 Power Panel Assembly Wiring Diagram – EE-2818 Sht. 2 Rev. E

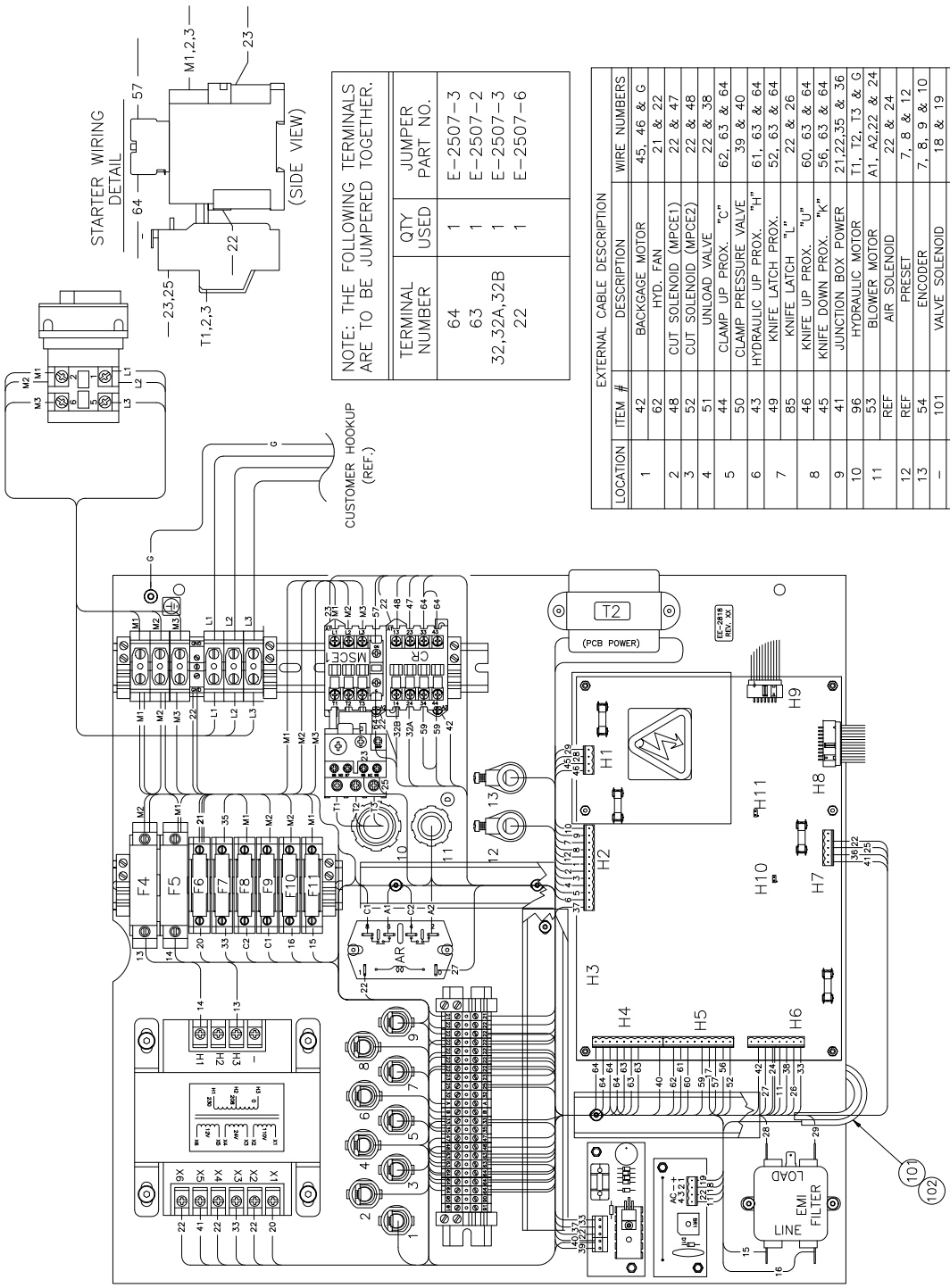

NOTE: THE FOLLOWING TERMINALS ARE TO BE JUMPERED TOGETHER.

TERMINAL NUMBER	QTY USED	JUMPER PART NO.
64	1	E-2507-3
63	1	E-2507-2
32,32A,32B	1	E-2507-3
22	1	E-2507-6

EXTERNAL CABLE DESCRIPTION

LOCATION	ITEM #	DESCRIPTION	WIRE NUMBERS
1	42	BACKGAGE MOTOR	45, 46 & G
	62	HYD. FAN	21 & 22
2	48	CUT SOLENOID (MPCE1)	22 & 47
3	52	CUT SOLENOID (MPCE2)	22 & 48
4	51	UNLOAD VALVE	22 & 38
5	44	CLAMP UP PROX. "C"	62, 63 & 64
	50	CLAMP PRESSURE VALVE	39 & 40
6	43	HYDRAULIC UP PROX. "H"	61, 63 & 64
7	49	KNIFE LATCH PROX.	52, 63 & 64
	85	KNIFE LATCH "L"	22 & 26
8	46	KNIFE UP PROX. "U"	60, 63 & 64
	45	KNIFE DOWN PROX. "K"	56, 63 & 64
9	41	JUNCTION BOX POWER	21,22,35 & 36
10	96	HYDRAULIC MOTOR	T1, T2, T3 & G
11	53	BLOWER MOTOR	A1, A2,22 & 24
	REF	AIR SOLENOID	22 & 24
12	REF	PRESET	7, 8 & 12
13	54	ENCODER	7, 8, 9 & 10
–	101	VALVE SOLENOID	18 & 19
–	102	PRESSURE SWITCH	17 & 64

11.19 Power Panel Assembly – EE-2818 Sht. 1 Rev. T

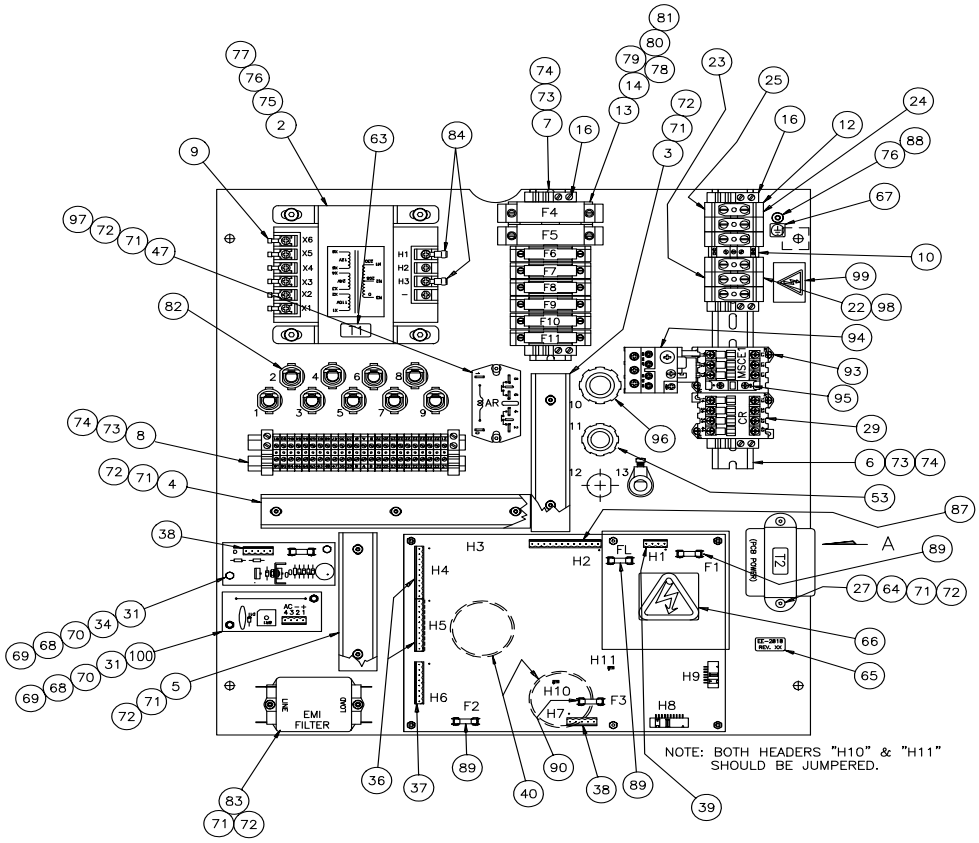

TRANSFORMER COLOR CODE	
T2	
WIRE COLOR	WIRE NO.
BLACK	22
BLACK/WHITE	21
BLACK/RED	–
BLACK/YELLOW	–
BLUE	6
BLUE/YELLOW	5
BLUE	4
RED	3
RED/YELLOW	2
RED	1

VIEW "A"

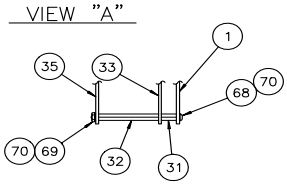

TERMINAL BLOCK DETAIL

SCALE 2X

INSERT SEPARATOR PLATE BETWEEN TERM. #63 & #64

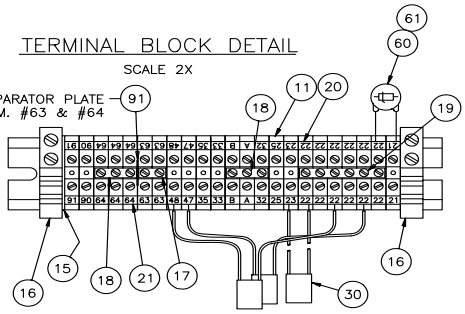

Power Panel Assembly – EE-2818 Sht. 1 Rev. T (Cont.)

NO.	PART NO.	DESCRIPTION OF ACCESSORIES	QTY
1	47512	PANEL – POWER	1
2	E–1089–41	TRANSFORMER – 208–230V	1
3	E–1429–16	WIRE DUCT & COVER – 6" LONG	1
4	E–1429–17	WIRE DUCT & COVER – 9" LONG	1
5	E–1429–18	WIRE DUCT & COVER – 5–1/4" LONG	1
6	E–1977–16	RAIL – TERMINAL – 10–5/8" LONG	1
7	E–1977–18	RAIL – TERMINAL – 6–1/2" LONG	1
8	E–1977–20	RAIL – TERMINAL – 7–1/4" LONG	1
9	E–1214–1	CONNECTOR – INS. LOCKING FORK (14–16GA.)	6
10	E–2068–3	TERMINAL BLOCK – GROUNDING	1
11	E–2068–8	TERMINAL BLOCK – #10 AWG.	23
12	E–2068–7	TERMINAL BLOCK – 3 AWG.	6
13	E–1974–5	TERMINAL BLOCK – FUSEHOLDER, MIDGET	2
14	E–1974–8	TERMINAL BLOCK – FUSEHOLDER, GLASS	6
15	E–2069–3	END PLATE	1
16	E–2070–1	END BRACKET	7
17	E–2507–2	FIXED BRIDGE – 2 POLE	1
18	E–2507–3	FIXED BRIDGE – 3 POLE	2
19	E–2507–6	FIXED BRIDGE – 6 POLE	1
20	E–1356–116	MARKING STRIP – TERMINAL BLOCK	1
21	E–1356–117	MARKING STRIP – TERMINAL BLOCK	1
22	E–1356–71	MARKING STRIP – TERMINAL BLOCK	1
23	E–1356–122	MARKING STRIP – TERMINAL BLOCK	1
24	E–1356–118	MARKING STRIP – TERMINAL BLOCK	1
25	E–1356–119	MARKING STRIP – TERMINAL BLOCK	1
26	E–1453–6	TUBING – SHRINK, 1/8" DIA. 1" LONG	1
27	E–2742–5	TRANSFORMER – 120/230V PRIM., 16/24V SC.	1
28	E–1214–49	CONNECTOR – 1/4" FULLY INS. QUICK DISC.	8
29	E–2403–2	CONTACTOR – RELAY (CR)	1
30	E–1736–2	QUENCHARC – WIRE LEADS	3
31	E–1152–56	STAND–OFF – 1/2" LONG	10
32	E–1152–43	STAND–OFF – 2" LONG	2
33	EE–2807–1	P.C.B. ASM. – MOTOR CONTROLLER	1
34	EE–2813	P.C.B. ASM. – PULSE WIDTH MODULATOR	1

NO.	PART NO.	DESCRIPTION OF ACCESSORIES	QTY
35	47157–6	P.C.B. COVER – CLEAR	1
36	E–2066–10	PLUG CONNECTOR – P.C.B. 10 PIN	2
37	E–2066–8	PLUG CONNECTOR – P.C.B. 8 PIN	1
38	E–2066–5	PLUG CONNECTOR – P.C.B. 5 PIN	1
39	E–2066–4	PLUG CONNECTOR – P.C.B. 4 PIN	1
40	E–2196–21	HOLE PLUG – 2" DIA	2
41	EE–2834	CABLE ASM. – JUNCTION BOX	1
42	EE–2833	CABLE ASM. – BACKGAGE MOTOR	1
43	EE–2820	PROX. ASSEMBLY – HYDRAULIC UP	1
44	EE–2820–1	PROX. ASSEMBLY – CLAMP UP	1
45	EE–2820–6	PROX. ASSEMBLY – KNIFE DOWN	1
46	EE–2820–3	PROX. ASSEMBLY – KNIFE UP	1
47	E–2232–2	RELAY – AIR BLOWER (AR)	1
48	EE–2821	CABLE ASSEMBLY – CUT SOLENOID"A" (MSCE1)	1
49	EE–2842	PROX. ASSEMBLY – KNIFE LATCH	1
50	EE–2821–3	CABLE ASSEMBLY – ADJUST. PRESS. SOLENOID	1
51	EE–2821–2	CABLE ASSEMBLY – UNLOAD VALVE SOLENOID	1
52	EE–2821–1	CABLE ASSEMBLY – CUT SOLENOID "B" (MSCE2)	1
53	EE–2884	CONDUIT ASSEMBLY – BLOWER/AIR SOL.	1
54	EE–2822	CABLE ASSEMBLY – ENCODER	1
55	EE–2817	CABLE ASSEMBLY – PRESETTER	REF.
56	E–2743	WIRE, #18 GA. YEL/GRN MTW (SH'T 2)	AS NEEDED
57	E–709–R	WIRE, #18 GA. RED MTW (SH'T 2)	AS NEEDED
58	E–849–R	WIRE, #16 GA. RED MTW (SH'T 2)	AS NEEDED
59	E–1213–B	WIRE, #10 GA. BLACK MTW (SH'T 2)	AS NEEDED
60	E–1377	VARISTOR – SUPRESSOR, MOV	1
61	E–1453–3	SHRINK TUBING – 1" LONG	2
62	EE–2825	CABLE ASSEMBLY – HYD. FAN	1
63	E–1584–51	LABEL – TRANSFORMER, "T1"	1
64	E–1584–52	LABEL – TRANSFORMER, "T2"	1
65	E–1584–( )	LABEL – ASM. NO./REV. LEVEL	1
66	S–1781–35	LABEL – CAUTION, ELEC. DANGER	1
67	S–1781–42	LABEL – GRND SYMBOL	1
68	H–6910–63203	SCREW, #6–32NC X 3/8" BUT HD CAP	10

NO.	PART NO.	DESCRIPTION OF ACCESSORIES	QTY
69	H–6423–#6	NUT, #6–32NC HEX	10
70	H–7324–#6	WASHER, #6 INT. TOOTH	20
71	H–6910–83203	SCREW, #8–32NC X 3/8" BUT HD CAP	13
72	H–7324–#8	WASHER, #8 INT. TOOTH	13
73	H–6910–102403	SCREW, #10–24NC X 3/8" BUT HD CAP	8
74	H–7324–#10	WASHER, #10 INT. TOOTH	8
75	H–6910–403	SCREW, 1/4–20NC X 3/8" BUT HD CAP	4
76	H–7324–8	WASHER, 1/4 INT. TOOTH	5
77	H–7319–4	WASHER, 1/4 USS FLAT	4
78	E–2308	FUSE – 3.2A SB MIDGET, "F4","F5"	2
79	E–889–35	FUSE – 1AMP SLO–BLO GLASS, "F6"	1
80	E–889–9	FUSE – 8AMP SLO–BLO GLASS, "F7"	1
81	E–889–5	FUSE – 4AMP SB GLASS, "F8","F9","10","11"	4
82	S–1350–16	STRAIN RELIEF – CABLE	10
83	E–2730–3	FILTER – EMI/EFI, PANEL MOUNT	1
84	E–1214–7	CONNECTOR – #10 INS. RING (10–12GA)	2
85	EE–2843	CABLE ASSEMBLY – KNIFE LATCH	1
86	S–1694	TY–WRAP – CABLE (NOT SHOWN)	10
87	E–2066–12	PLUG CONNECTOR – P.C.B. 12 PIN	1
88	E–2856	SCREW – 1/4–20 X 3/8 GREEN BIND, MACH.	1
89	E–2330–7	FUSE – 5A SLO–BLO, GLASS METRIC (F1 & F2)	2
90	E–2330–8	FUSE – 6.3A SLO–BLO, GLASS METRIC (F3)	1
91	E–2864	SEPARATOR PLATE – TERMINAL BLOCK	1
92	E–1599–11	IC CHIP – 32 PIN PACKAGE (BLANK)	1
93	E–2805–1	STARTER – 3 PHASE (B30CF)	1
94	E–2441–12	RELAY – OVERLOAD, (24–32A) (T25DU32)	1
95	E–2376–1	AUXILIARY CONTACT – GOLD CONTACTS	1
96	EE–2836	CONDUIT ASM. – HYDRAULIC MOTOR, 3 PHASE	1
97	H–7321–#8	WASHER –#8 FLAT	2
98	E–2752–2	COVER – TERMINAL BLOCK	3
99	S–1781–50	LABEL – EURO ELECT. SHOCK	1
100	EE–2448–1	P.C.B. ASM. – KNIFE FLOW VALVE CONT.	1
101	EE–2906	CABLE ASM. – VALVE SOLENOID (SEE SHT 2)	1
102	EE–2906–1	CABLE ASM. – PRESSURE SW. (SEE SHT 2)	1

11.20 Hydraulic Manifold – H-512 Rev. C

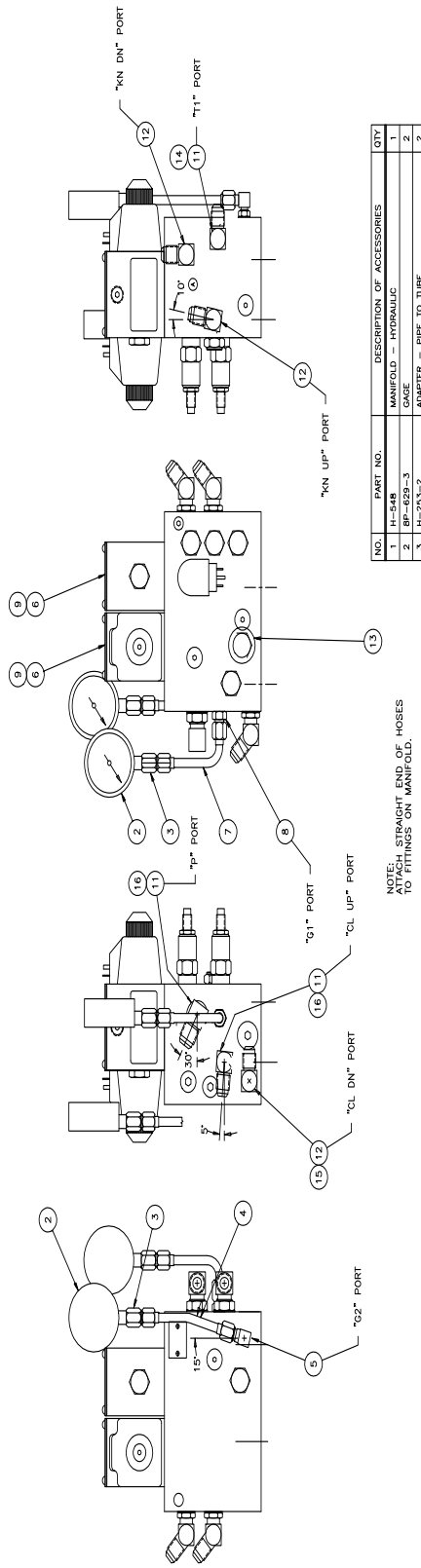

NO.	PART NO.	DESCRIPTION OF ACCESSORIES	QTY
1	H-548	MANIFOLD – HYDRAULIC	1
2	BP-629-3	GAGE	2
3	H-253-2	ADAPTER – PIPE TO TUBE	2
4	H-425-1	TUBE ASSEMBLY – "G2" PORT	1
5	H-230	ELBOW – 'O' RING TO TUBE	1
6	H-6918-412	1/4-20 X 1-1/2" SOCKET HD. CAP SCREW	8
7	H-329	TUBE ASSEMBLY – "G1" PORT	1
8	H-236-5	ADAPTER – 'O' RING TO TUBE	1
9	H-423-1	VALVE – 4 WAY (24 VAC)	2
10			
11	H-230-4	ELBOW – 'O' RING TO TUBE (849-FSO-8X8)	3
12	H-272-3	ELBOW – 45° 'O' RING TO TUBE (854-FSO-8X8)	3
13	H-203-33	VALVE- PRESSURE REDUCING	1
14	H-242-37	HOSE ASM. – JIC TO JIC X 30"	1
15	H-242-45	HOSE ASM. – JIC TO JIC X 15"	1
16	H-242-47	HOSE ASM. – JIC TO JIC X 20"	2
17	H-242-63	HOSE ASM. – STRAIGHT JIC TO 90° JIC X 25"	1
18			

11.21 Hydraulic Manifold – H-548

NO.	CMC PART NO.	MFR. PART NO.	DESCRIPTION OF ACCESSORIES	QTY
1	H-203-26	RV5-10-S-0-20	RELIEF VALVE	1
2	H-203-29	CV3-10-P-0-03	CHECK VALVE	1
3	H-203-30	PSV2-10-S-0-24/16	SEQUENCE VALVE	1
4	5136	PRV2-10-K-0-20	PRESSURE REDUCING VALVE- MANUAL (X)	REF.
	H-203-33	EPRV1-SB24-14	PRESSURE REDUCING VALVE- ELECTRICAL (XD/XD)	1
5	N/P	20297	NAMEPLATE	1
6	E-1069-17	265555	COIL (24 VAC)	1
7	H-427-5	121-6T	SAE PLUG (220 IN-LB TORQUE)	8
8	H-427-2	121-5T	**SAE PLUG** (180 IN-LB TORQUE)	9
9	H-427	121-2T	**SAE PLUG** (35 IN-LB TORQUE)	4
10	H-200-3	SV5-10-0-0-00	CARTRIDGE VALVE	1
11	N/P	41112	VALVE MANIFOLD	1
12				
13	H-427-3	121-8T	SAE PLUG (550 IN-LB TORQUE)	2
14	H-203-26	RV5-10-S-0-20	RELIEF VALVE	1
15	N/P	21781-015	ORFICE PLUG	1
16	H-203-29	CV3-10-P-0-10	CHECK VALVE	1

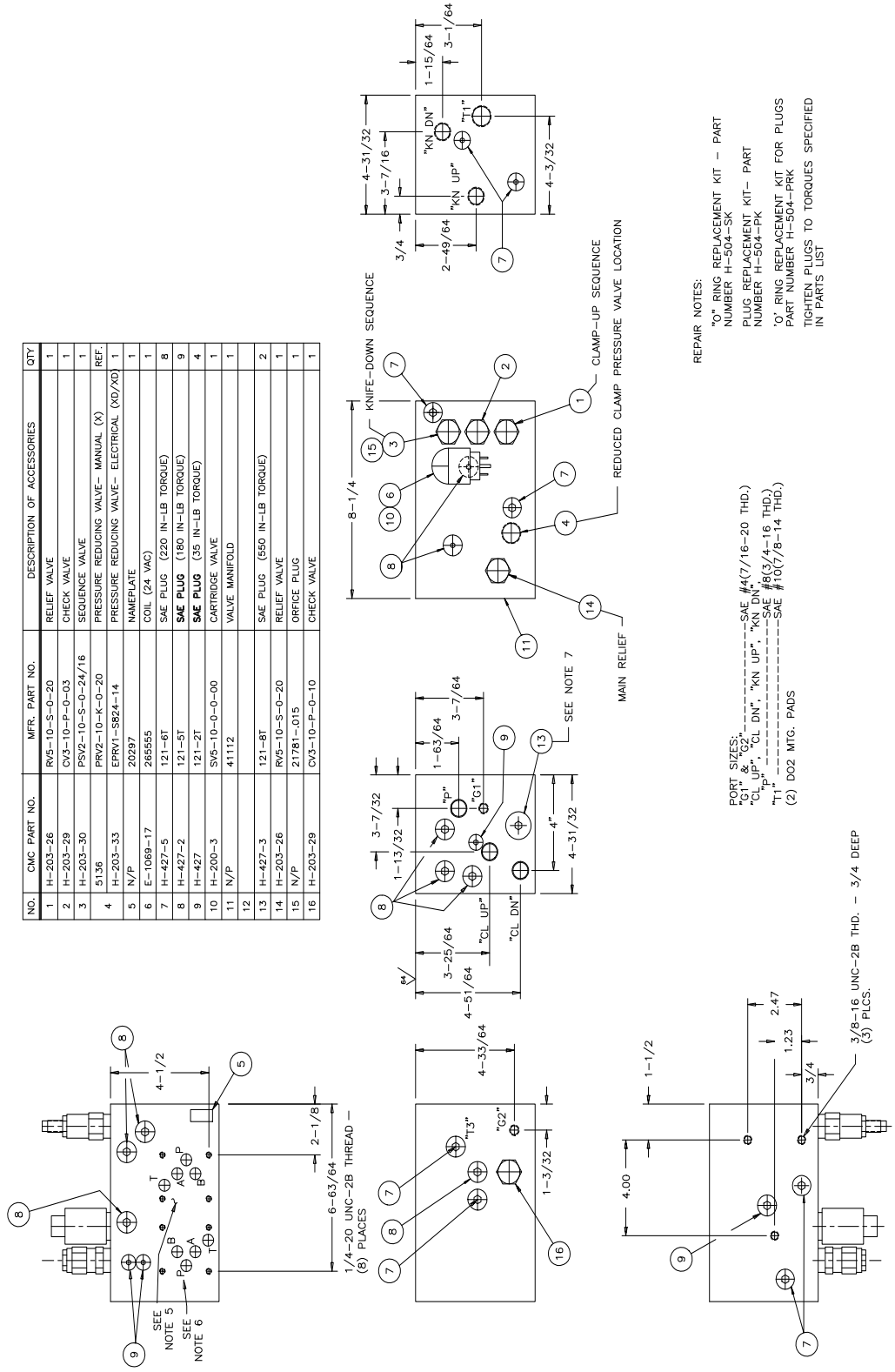

11.22 Hydraulic Schematic – H-548

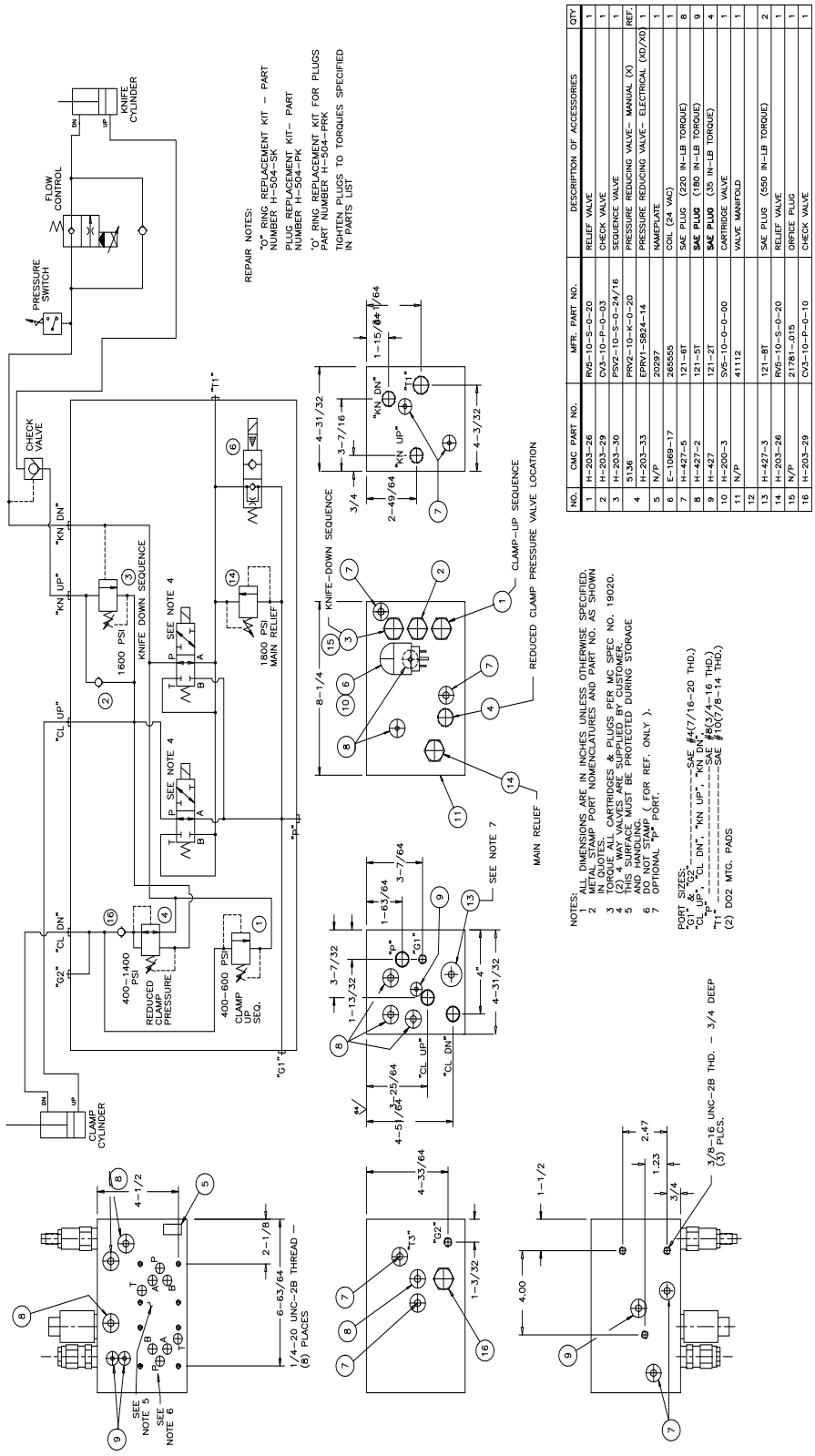

NO.	CMC PART NO.	MFR. PART NO.	DESCRIPTION OF ACCESSORIES	QTY
1	H-203-26	RV5-10-S-0-20	RELIEF VALVE	1
2	H-203-29	CV3-10-P-0-03	CHECK VALVE	1
3	H-203-30	PSV2-10-S-0-24/16	SEQUENCE VALVE	1
5	5136	PRV2-10-K-0-20	PRESSURE REDUCING VALVE- MANUAL (X)	REF
4	H-203-33	EPRV1-SB24-14	PRESSURE REDUCING VALVE- ELECTRICAL (XD/XD)	1
5	N/P	20297	NAMEPLATE	1
6	E-1069-17	265555	COIL (24 VAC)	1
7	H-427-5	121-6T	SAE PLUG (220 IN-LB TORQUE)	8
8	H-427-2	121-5T	**SAE PLUG** (180 IN-LB TORQUE)	9
9	H-427	121-2T	**SAE PLUG** (35 IN-LB TORQUE)	4
10	H-200-3	SV5-10-0-00	CARTRIDGE VALVE	1
11	N/P	41112	VALVE MANIFOLD	1
12				
13	H-427-3	121-8T	SAE PLUG (550 IN-LB TORQUE)	2
14	H-203-26	RV5-10-S-0-20	RELIEF VALVE	1
15	N/P	21781-015	ORFICE PLUG	1
16	H-203-29	CV3-10-P-0-10	CHECK VALVE	1

11.23 Hydraulic Pressure Switch Assembly - 49195

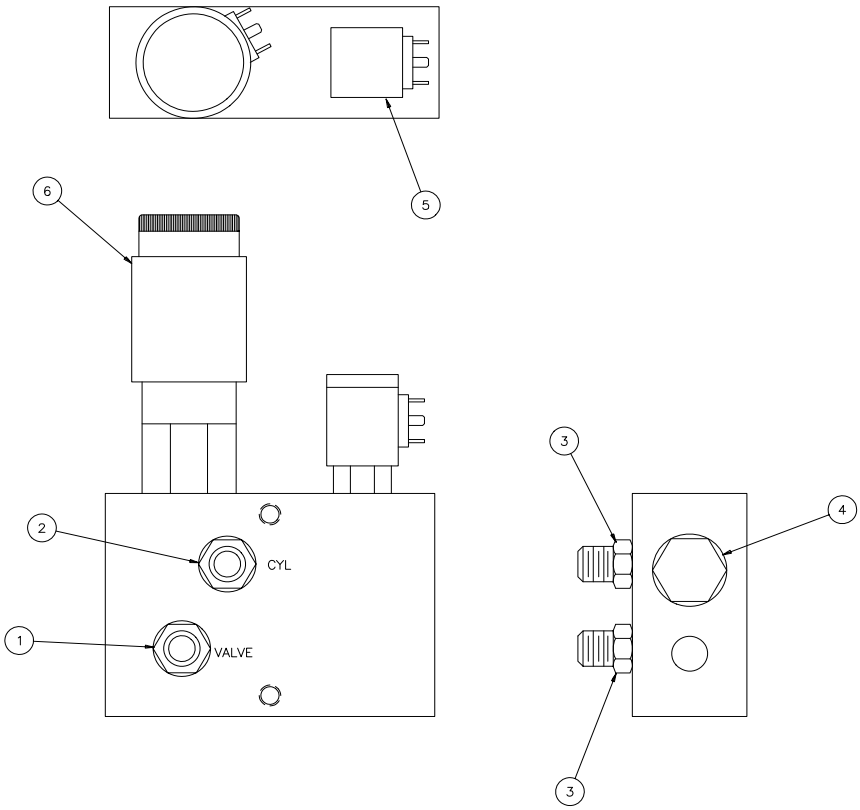

NO.	PART NO.	DESCRIPTION OF ACCESSORIES	QTY
1	H–242–37	HOSE – HYDRAULIC, 30" LONG (NOT SHOWN)	1
2	H–242–67	HOSE – HYDRAULIC, 22" LONG (NOT SHOWN)	1
3	H–236–4	NIPPLE – MALE, 3/4–16	2
4	H–203–18	VALVE – CHECK (VICKERS CV–3–10–65)	1
5	H–203–36	SWITCH – PRESSURE	1
6	H–203–35	VALVE – KNIFE FLOW CONTROL	1

11.24 Cut Button Assembly – EE-2832

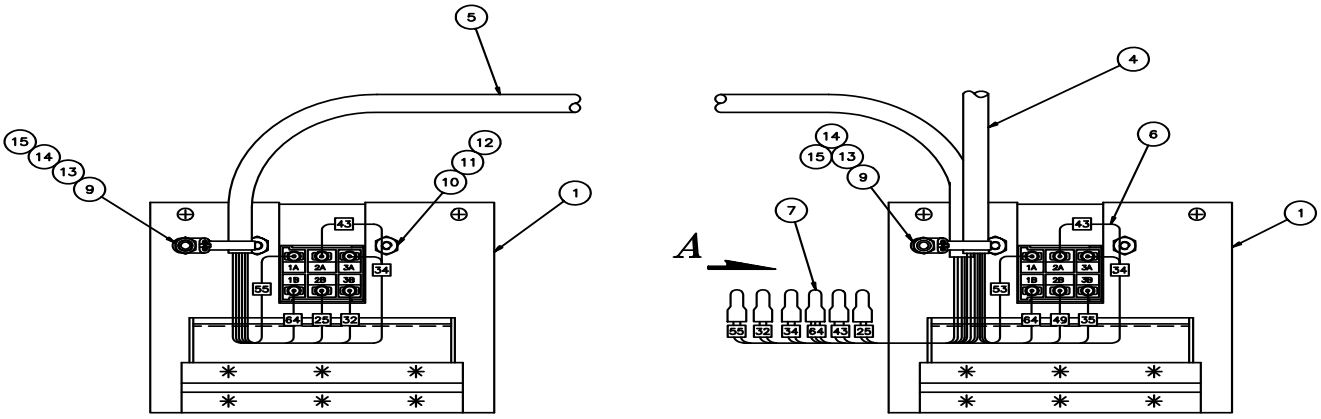

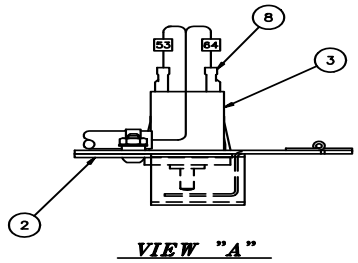

VIEW "A"
SCALE: NONE

CHART #1

WIRE NO.	COLOR	SWITCH TERMINAL
64	BLUE	1B
55	WHITE	1A
43	ORANGE	2A
34	GREEN	3A
32	BLACK	3B
25	RED	2B

NO.	PART NO.	DESCRIPTION OF ACCESSORIES	QTY
1	47158–1	SWITCH PLATE ASSEMBLY	2
2	47515	PLATE – SWITCH	2
3	E–2457–4	SWITCH – 3 POLE	2
4	E–2078–3	CABLE – #18 GA. 8 COND. 49" LONG	1
5	E–2078	CABLE – #18 GA. 6 COND. 38" LONG	1
6	E–709–B	WIRE – #18 GA BLACK MTW 9" LONG	3
7	E–1237–6	WIRE NUT	6
8	E–1214–51	CONNECTOR– .187 INS. FEMALE QUICK DISC.	12
9	S–1694–2	TYRAP	2
10	H–6423–#8	NUT – #8–32 HEX	4
11	H–6910–83204	SCREW – #8–32 X 1/2" BUT HD	4
12	H–7330–#8	WASHER – #8 EXT. TOOTHLOCK	4
13	H–7330–#10	WASHER – #10 EXT. TOOTHLOCK	2
14	H–6423–#10	NUT – #10–24NC HEX	2
15	H–6910–102404	SCREW – #10–24NC X 1/2" BUT HD	2

CHART #2

WIRE NO.	COLOR	SWITCH TERMINAL	WIRE LENGTH
64	BLUE	1B	14"
55	WHITE	–	16"
53	YELLOW	1A	16"
49	BROWN	2B	12"
43	BLACK	2A	–
35	ORANGE	3B	7"
34	BLACK	3A	–
32	BLACK	–	8"
25	RED	–	9"

11.25 Console – EE-2823, Rev. “B”

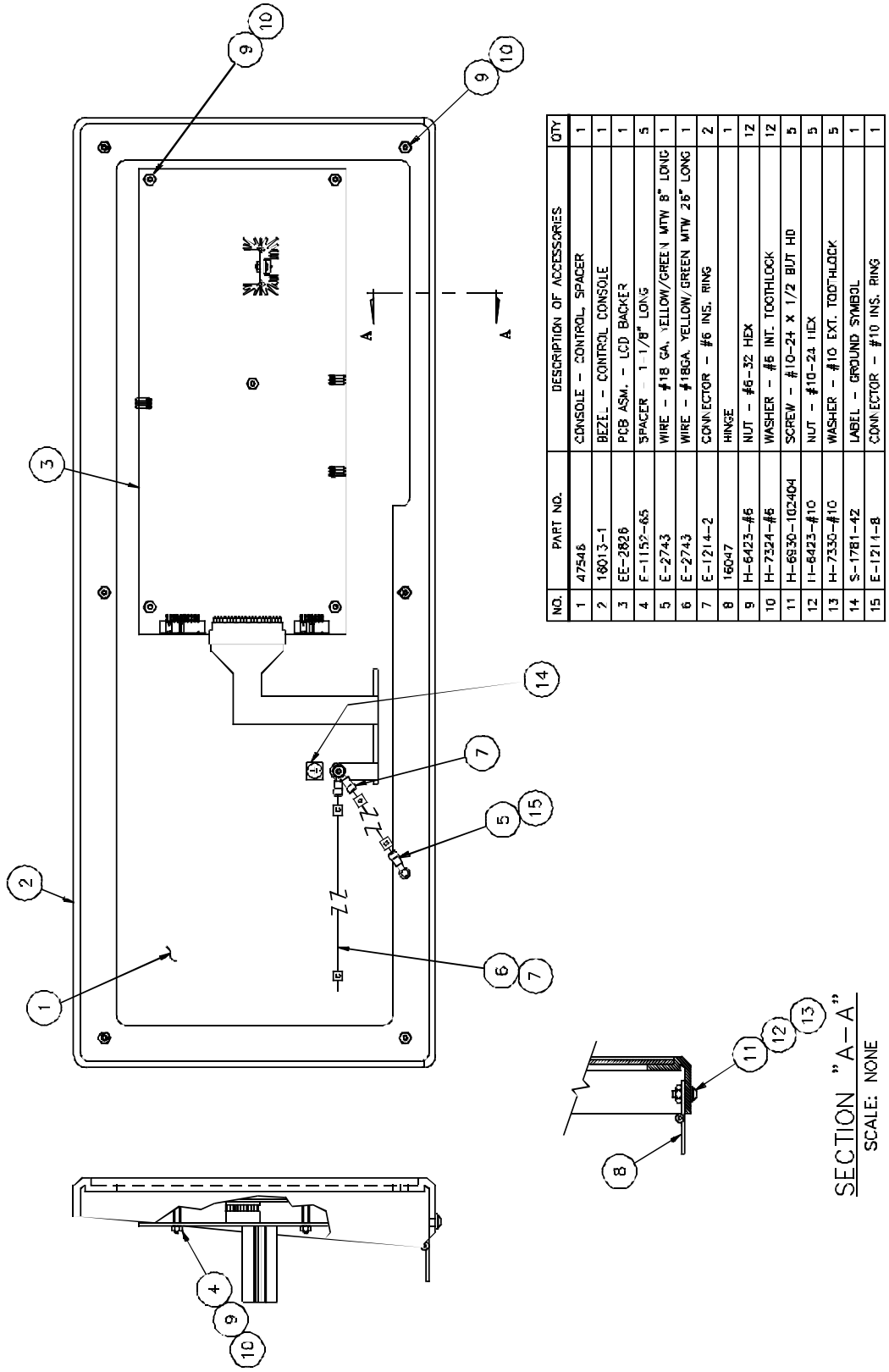

NO.	PART NO.	DESCRIPTION OF ACCESSORIES	QTY
1	47546	CONSOLE – CONTROL, SPACER	1
2	18013-1	BEZEL – CONTROL CONSOLE	1
3	EE-2826	PCB ASM. – LCD BACKER	1
4	F-1152-65	SPACER 1-1/8" LONG	5
5	E-2743	WIRE – #18 GA. YELLOW/GREEN MTW 8" LONG	1
6	E-2743	WIRE – #18GA. YELLOW/GREEN MTW 26" LONG	1
7	E-1214-2	CONNECTOR – #6 INS. RING	2
8	16047	HINGE	1
9	H-6423-#6	NUT – #6-32 HEX	12
10	H-7324-#6	WASHER – #6 INT. TOOTHLOCK	12
11	H-6930-102404	SCREW – #10-24 X 1/2 BUT HD	5
12	H-6423-#10	NUT – #10-24 HEX	5
13	H-7330-#10	WASHER – #10 EXT. TOOTHLOCK	5
14	S-1781-42	LABEL – GROUND SYMBOL	1
15	E-1214-8	CONNECTOR – #10 INS. RING	1

11.26 Air Table Blower Assembly – Single Phase – 49083 Rev. D

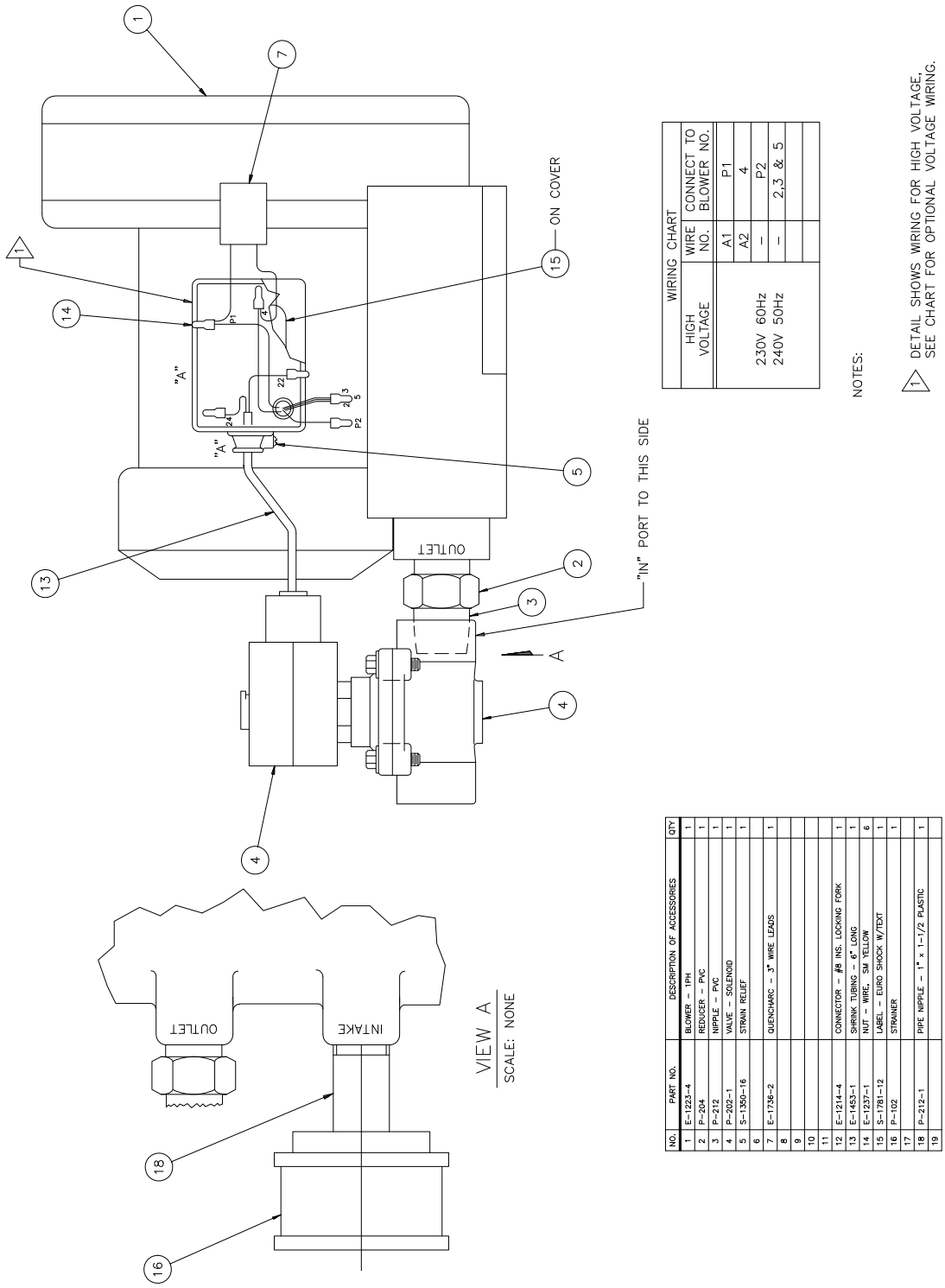

WIRING CHART		
HIGH VOLTAGE	WIRE NO.	CONNECT TO BLOWER NO.
230V 60Hz 240V 50Hz	A1	P1
	A2	4
	–	P2
	–	2,3 & 5

NOTES:

1. DETAIL SHOWS WIRING FOR HIGH VOLTAGE, SEE CHART FOR OPTIONAL VOLTAGE WIRING.

NO.	PART NO.	DESCRIPTION OF ACCESSORIES	QTY
1	E-1223-4	BLOWER – 1PH	1
2	P-204	REDUCER – PVC	1
3	P-212	NIPPLE – PVC	1
4	P-202-1	VALVE – SOLENOID	1
5	S-1350-16	STRAIN RELIEF	1
6			
7	E-1736-2	QUENCHARC – 3" WIRE LEADS	1
8			
9			
10			
11			
12	E-1214-4	CONNECTOR – #9 INS. LOCKING FORK	1
13	E-1453-1	SHRINK TUBING – 6" LONG	1
14	E-1237-1	NUT – WIRE, SM YELLOW	6
15	S-1781-12	LABEL – EURO SHOCK W/TEXT	1
16	P-102	STRAINER	1
17			
18	P-212-1	PIPE NIPPLE – 1" x 1-1/2 PLASTIC	1
19			

11.27 Knife Latch Assembly – 47568 Rev. C

NO.	PART NO.	DESCRIPTION OF ACCESSORIES	QTY
1	47505–1	PLATE– KNIFE LATCH MOUNT	1
2	E–974–2	SOLENOID	1
3	47567	LINK– CHAIN	2
4	H–5254–510	SCREW– 5/16 X 1–1/4 SOC. SHOULDER	1
5	47553–1	LINK ASSEMBLY– KNIFE LATCH	1
6	41117	SPRING– EXTENSION	1
7	H–6451–0500	RETAINING RING– GRIPPING EXTERNAL	1
8	S–1810–9	'O' RING	1
9	41112–2	ASSEMBLY– KNIFE LATCH BLOCK	1
10	41116–2	ROD– KNIFE LATCH	1
11	H–6910–83203	SCREW– #8–32 X 3/8 BUT. HD. SOC.	8
12	H–7321–#8	WASHER– #8 SAE FLT PLTD	4
13	H–7324–#8	WASHER– #8 INT. TOOTH	8
14	H–5247–4	NUT– 1/4–20 FLEX LOCK	1
15	E–1152–9	SPACER	1

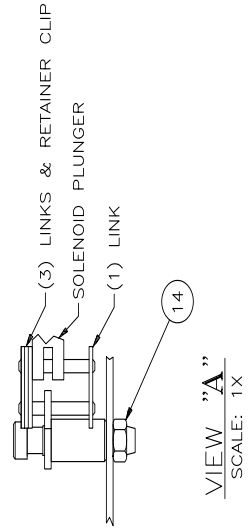

VIEW "A"
SCALE: 1X

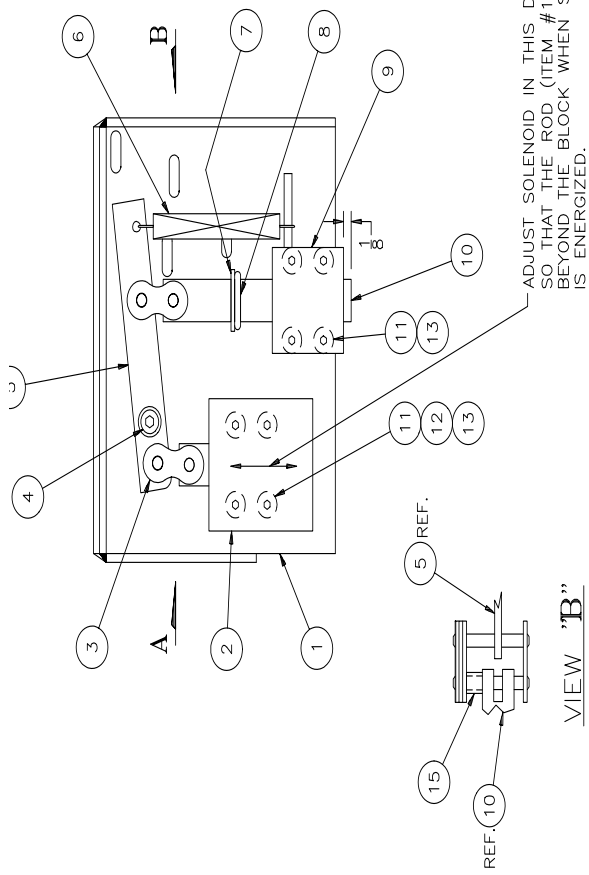

VIEW "B"
SCALE: 1X

11.28 Paper Deflector Assembly – 49115 Rev. G

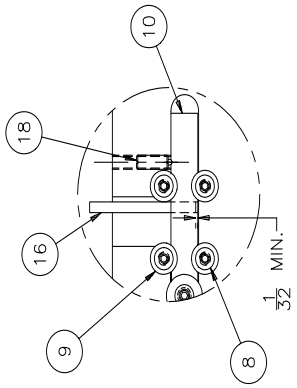

INSET "A"
SCALE: 2X

NO.	PART NO.	DESCRIPTION OF ACCESSORIES	QTY
1	49114	PAPER DEFLECTOR	1
2	49117	KNIFE BAR FOLLOWER	1
3	49113–1	PAPER DEFLECTOR GUIDE	1
4	49119	PIN – PAPER DEFLECTOR SPRING MOUNT	1
5	49112	SPRING – PAPER DEFLECTOR	1
6	48118	PIN – PAPER DEFLECTOR SPRING MOUNT	1
7	49116	SHAFT – PAPER DEFLECTOR	1
8	H–6910–63204	SCREW – #6–32 X 1/4 BUT	4
9	H–7322–#6	WASHER – #6 POLISHED	4
10	49184–1	HOLD DOWN BLOCK	1
11	49185	BEARING	1
12	H–6918–407	SCREW – 1/4–20 X 7/8 SHCS	1
13	H–7324–8	WASHER – 1/4 INT. TOOTH	2
14	H–21S–187–100	3/16 X 1 ROLL PIN	2
15	S–1073–37	3/8 – RET. RING	2
16	H–5246–212	PIN – 1/8 X 1–1/2 DOWEL	1
17	H–7321–4	WASHER – 1/4 PLAIN	2
18	S–2021–1	PLUNGER – SPRING	1
19	.	.	.
20	.	.	.
21	.	.	.
22	H–6910–102403	SCREW – #10–24 X 3/8 BUTT HD.	1
23	H–6918–410	SCREW – 1/4–20 X 1–1/4 SHCS	1
24	H–6918–408	SCREW – 1/4–20 X 1 SHCS	2
25	H–21S–250–0500	1/4 X 1/2 ROLL PIN	1

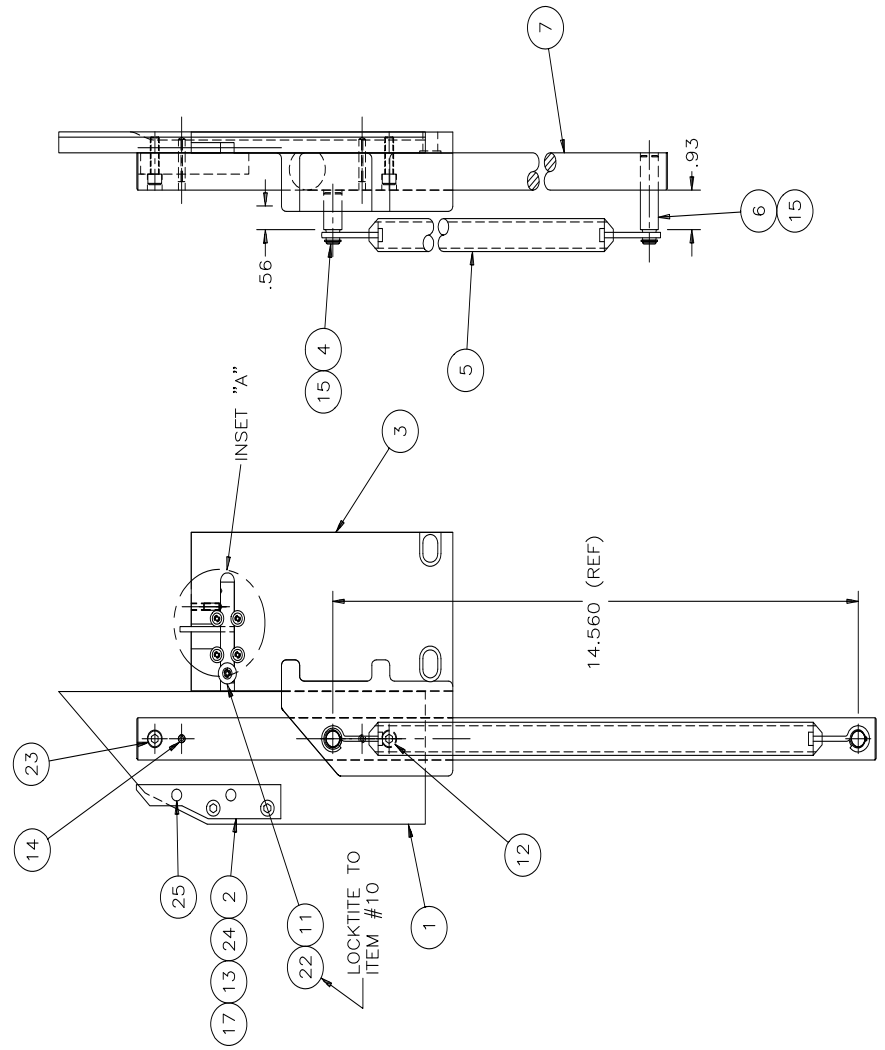

11.29 Label – Power Panel Connection Procedure – S-1781-52 Rev. E

!! NOTICE !!

INCORRECT POWER HOOK–UP WILL DAMAGE YOUR MACHINE!

WARNING: ALWAYS DISCONNECT POWER AT THE MAIN POWER PANEL BEFORE WORKING ON THE MACHINE. LOCK IT OUT TO PREVENT ACCIDENTAL POWER UP. SEE POWER PANEL LOCKOUT PROCEDURE, PAGE 4, OF THE INSTRUCTION AND PARTS MANUAL.

CAUTION: FOLLOW CONNECTION DIAGRAM ON CONTROL TRANSFORMER (T1) FOR PROPER PRIMARY TAP CONNECTION. USE PROPER TAP THAT MATCHES VOLTAGE SUPPLIED TO THE MACHINE.

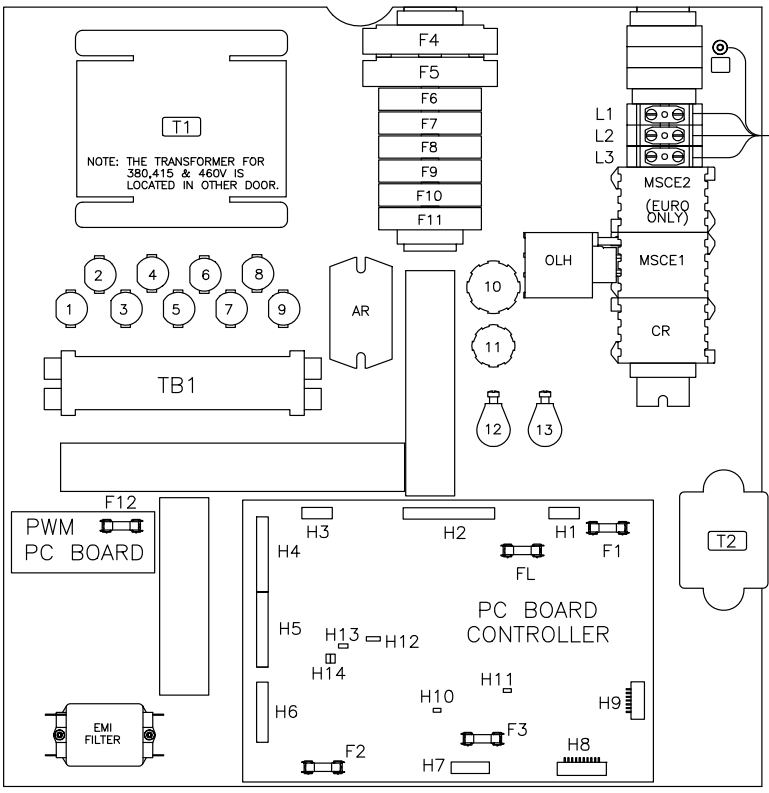

NOTE: TERMINAL "L3" IS USED FOR 3 PHASE MACHINES ONLY.

POWER SOURCE

IF CONNECTED TO A CIRCUIT PROTECTED BY FUSES, USE TIME DELAY FUSES WITH THIS PRODUCT.

FUSE	VALUE
F1	5A SB
F2	5A SB
F3	6.3A SB
F4	3.2A SB
F5	3.2A SB
F6	1A SB
F7	8A SB
F8	4A SB
F9	4A SB
F10	4A SB
F11	4A SB
F12	2A SB
FL	5A SB

CAUTION: FIRE HAZARD, REPLACE FUSE ONLY WITH SAME TYPE AND RATING. FOR 380, 415 AND 460V MACHINES, FUSES "F4" AND "F5" MUST BE RATED FOR 500V OR MORE.

305/370 SPACER S–1781–52

11.30 Warning Label – S-1781-8

CAUTION ¡PRECAUTION!
ATTENTION ACHTUNG

CRUSH HAZARD-keep hands from under paper clamp and knife. Use hand tools to load paper, and backgage to push out trimmed stock.
PELIGRO DE APLASTE- no meta las manos bajo la prensa del papel o la cuchilla. Use herramientas de mano para poner papel en la prensa y el sujetador lateral para sacar el papel cortado.
DANGER D'ECRASEMENT- Gardez vos mains à l'écart de la pince à papier et du couteau. Utilisez les outils pour charger le papier et le coulisseau pour pousser le matériel coupé.
ZERQUETSCHUNGSGEFAHR- Hände nicht unter die Paperklammer und das Papierschneidemesser halten. Benutzen Sie zum Laden des Papiers Handwerkzeuge, und den Papierschlitten, um das geschnittene Papier auszustoBen.

USE CUTTING AIDE to align stock under clamp.
USAR LA GUIA DE CORTE para alinear el material bajo el pison.
UTILISEZ LE GUIDE DE COUPE pour aligner le materiel sous la pince.
BENUTZEN SIE DIE PAPERSCHNEIDEFÜHRUNG, um das Matérial unter der Klammer auszurichten.

DISCONNECT POWER before cleaning, servicing, adjusting, or lubricating.
DESCONECTAR LA CORRIENTE ELECTRICA antes de limpiar, ajustar o lubricar la maquina.
DÉBRANCHER LA PUISSANCE avant le nettoyage, l'entretien l'ajustage, ou avant de lubrifier.
Vor Sauberung, Instandhaltung, Einstellung oder Schmieren **STROM ABSCHALTEN!**

DO NOT ALTER SAFETY MECHANISMS, they are for your protection.
NO ALTERAR LOS MECANISMOS DE SEGURIDAD, son para su proteccion.
NE PAS CHANGER LES MÉCANISMES DE SÉCURITÉ, Ils sont pour votre protection.
SICHERHEITSMECHANISMEN DÜRFEN NICHT GEÄNDERT WERDEN, sie sind zur Gewährleistung Ihrer Sicherheit da.

READ the instruction manual and **SAFETY PRECAUTIONS,** before operating. Ask your supervisor for a copy.
LEER DETENIDAMENTE el manual de_instrucciones y las **PRECAUCIONES DE SEGURIDAD** antes del funcionamiento. Pida a su distribuidor una copia.
LIRE le manuel d'instruction et **LES PRECAUTIONS DE SÉCURITÉ** avant le fonctionnement. Demander á votre surveillant pour une copie.
Vor Inbetriebnahme Anleitung und **SICHERHEITSVORSCHRIFTEN LESEN!** Lassen Sie sich von Ihrem Vorgesetzten ein Exemplar geben.

DO NOT OPERATE WITH ANY GUARDS REMOVED!
¡ NO TRABAJAR SIN ALGUNO DE LOS MECANISMOS DE SEGURIDAD!
NE PAS FAIRE FONCTIONNER AVEC AUCUNES PROTECTIONS ENLEVÉES!
WENN EINE SCHUTZVORRICHTUNG ENTFERNT IST NICHT IN BETRIEB NEHMEN!

DO NOT OPERATE WITH MORE THAN ONE PERSON!
¡ NO MANEJAR LA MAQUINA MAS DE UNA PERSONA!
NE PAS FAIRE FONCTIONNER AVEC PLUS D'UNE PERSONNE!
INBETRIEBNAHME NUR MIT EINER PERSON GESTATTET!

THE CHALLENGE MACHINERY COMPANY
1433 Fulton Street, Grand Haven, MI 49417, 616-842-8300
MADE IN U.S.A.
S-1781-8

11.31 Optional Photo Electric Control Assembly - 47540

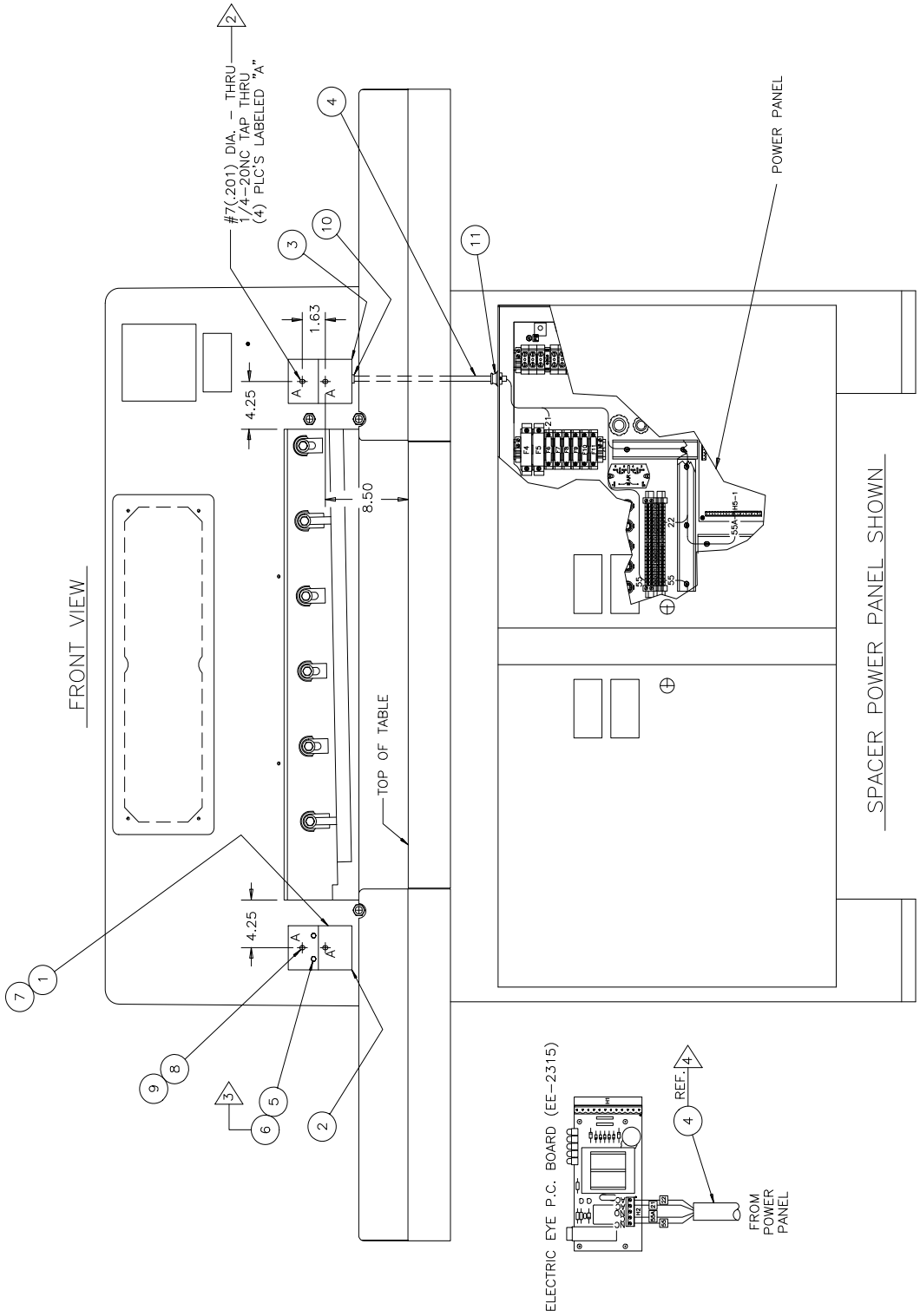

Optional Photo Electric Control Assembly – 47450 (Cont.)

NOTE: WIRING INSTRUCTIONS

DISCONNECT POWER BEFORE WIRING!
WITH THE POWER OFF, LOCATE CUT BUTTON WIRE #55 IN THE POWER PANEL. REMOVE FROM THE PC BOARD TERMINAL AND RELOCATE TO THE TERMINAL BLOCK #90.
WIRES FROM THE ELECTRIC EYE UNIT AS FOLLOWS:

WIRE #22 TO GO TO TERMINAL BLOCK #22
WIRE #21 TO GO TO FUSE BLOCK F6
WIRE #55 TO GO TO TERMINAL BLOCK #90
WIRE #55A TO GO TO CONTROL CIRCUIT BOARD; PC BOARD TERMINAL IN–1 (H5–1)

2 WHEN DRILLING AND TAPPING HOLES, KEEP METAL CHIPS OUT OF THE KNIFE BAR AREA. SEVERE DAMAGE MAY RESULT.

3 USE JACK SCREWS (ITEM #5 & 6) FOR SIDE TO SIDE ADJUSTMENTS OF 16547 AND A–8738–1. THESE ASSEMBLIES (ITEM #2 & 3) SHOULD BE ADJUSTED TO BE PARALLEL TO EACH OTHER.

4 USING THE STRAIN RELIEFS (ITEMS #10 & 11) IN THE POSITIONS SHOWN – WIRE CABLE (8" STRIPPED END) INTO P.C. BOARD AS SHOWN., THEN FOLLOW WIRING INSTRUCTIONS FOR POWER PANEL END.

SPECIAL INSTRUCTIONS	
MECHANICAL	ELECTRICAL
1) DRILL AND TAP (4) 1/4–20NC HOLES AT GIVEN DIMENSIONS 2) MOUNT A–8738–1 AND 16547 SECURELY AS SHOWN. 3) MOUNT CABLE ASSEMBLY EE–2252–3 TO 16547 AND RUN BEHIND EXTENSION TABLE THROUGH KNOCK–OUT ON THE TOP OF THE POWER PANEL BOX – AS SHOWN.	1) WIRE AS SHOWN. 2) ELECTRICAL SCHEMATIC: "X" E–2815 SPACER E–2814

NO.	PART NO.	DESCRIPTION OF ACCESSORIES	QTY
1	A–8749	PLATE ASSEMBLY, L.H. FRONT COVER	1
2	A–8738–1	L.H. PHOTO ELECTRIC CONTROL DEVICE	1
3	16547	R.H. PHOTO ELECTRIC CONTROL DEVICE	1
4	EE–2252–3	CABLE ASSEMBLY – PHOTO ELECTRIC	1
5	H–6938–102408	SCREW, #10–24 X 1/2 CUP PT SOC SET	4
6	H–6423–#10	NUT, #10–24 FINISHED HEX	4
7	H–6910–83203	SCREW, #8–32 X 3/8" BUT HD CAP	4
8	H–6913–404	SCREW, 1/4–20 X 1/2 HEX CAP	4
9	H–7321–4	WASHER, 1/4 STANDARD FLAT	4
10	S–1350–4	BUSHING – STRIAN RELIEF	1
11	S–1350–16	BUSHING – STRAIN RELIEF	1
12	B–180	BAG (NOT SHOWN)	1
13	47540	PRINT (ONLY)	1

11.32 R.H. Photo Electric Control Device – 16547, Rev. “A”

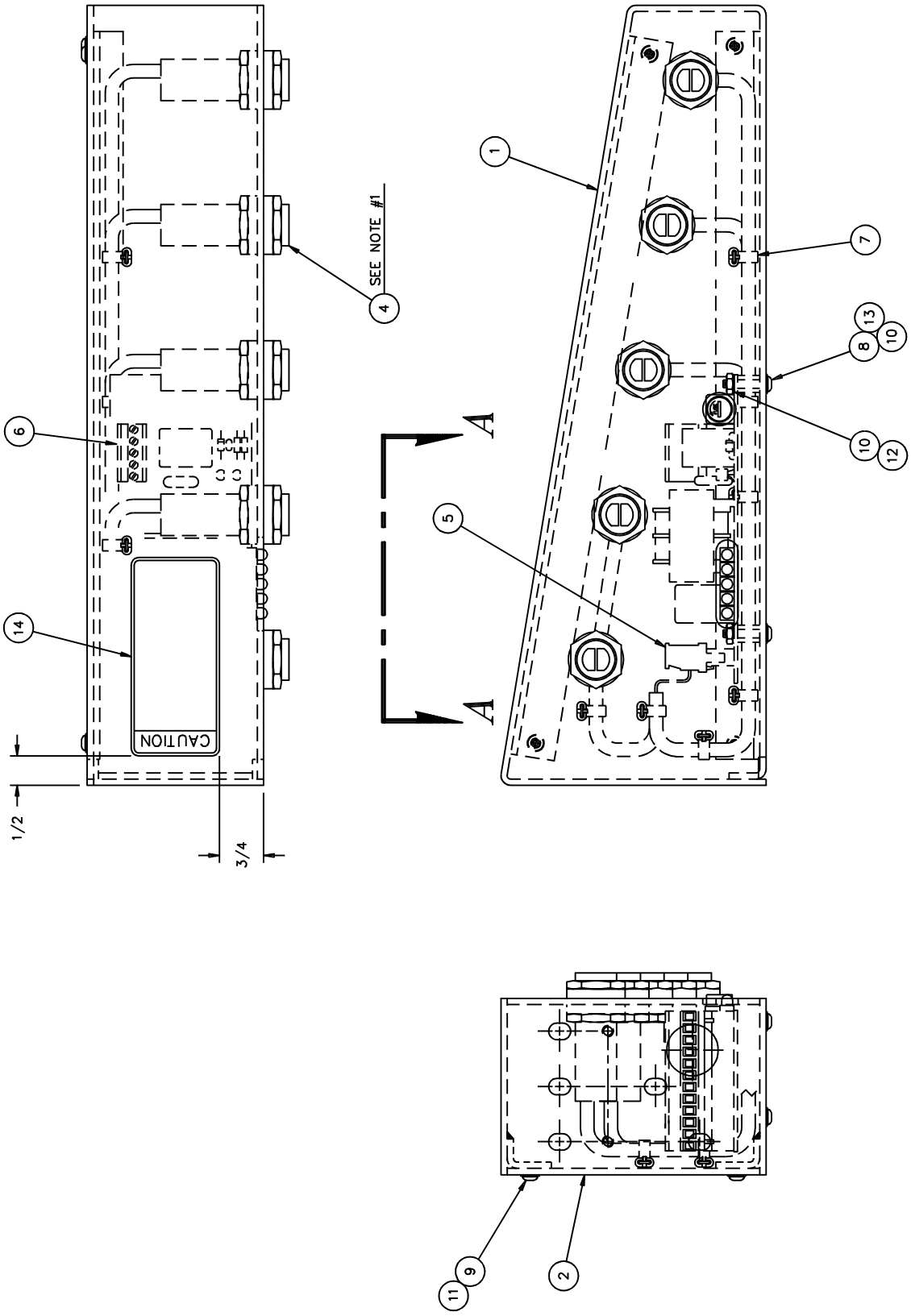

R.H. Photo Electric Control Device – 16547, Rev. “A”

NO.	PART NO.	DESCRIPTION OF ACCESSORIES	QTY
1	16545	R.H. BRACKET – WELDMENT	1
2	8735-1	PLATE – REAR	1
3	EE-2315	P.C. BOARD ASSEMBLY – ELECTRIC EYE	1
4	E-2318	PHOTOELECTRIC SWITCH	5
5	E-2066-12	CONNECTOR – 12 PIN PLUG	1
6	E-2066-5	CONNECTOR – 5 PIN PLUG	1
7	S-1694	TYRAP	6
8	H-6910-63202	#6-32NC X 1/4" BUT HD MACH SCREW	4
9	H-6910-83203	#8-32NC X 3/8" BUT HD MACH SCREW	4
10	H-7324-#6	#6 INTERNAL TOOTH LOCKWASHER	4
11	H-7324-#8	#8 INTERNAL TOOTH LOCKWASHER	4
12	H-6423-#6	#6-32NC HEX NUT	4
13	E-1152-29	SPACER – #6-32 X 3/8" HEX MALE/FEMALE	4
14	S-1781-12	LABEL – CAUTION	1

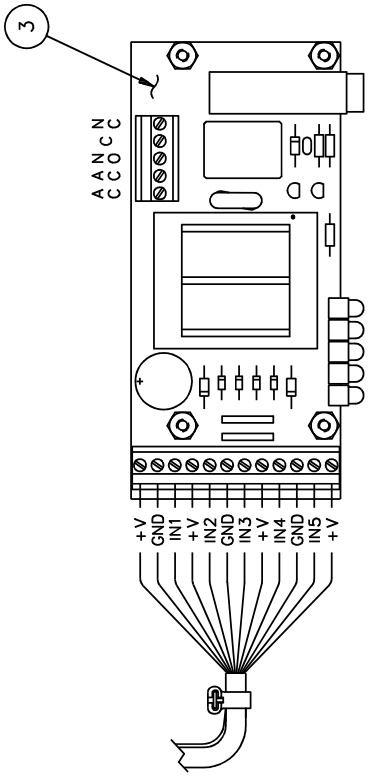

VIEW A–A

NOTE:

1) CUT PHOTOELECTRIC SWITCH CABLE TO LENGTH REQ'D., STRIP JACKET BACK 3", AND STRIP WIRE INSULATION BACK 1/4.

11.33 Air Extension Table Option - 49157

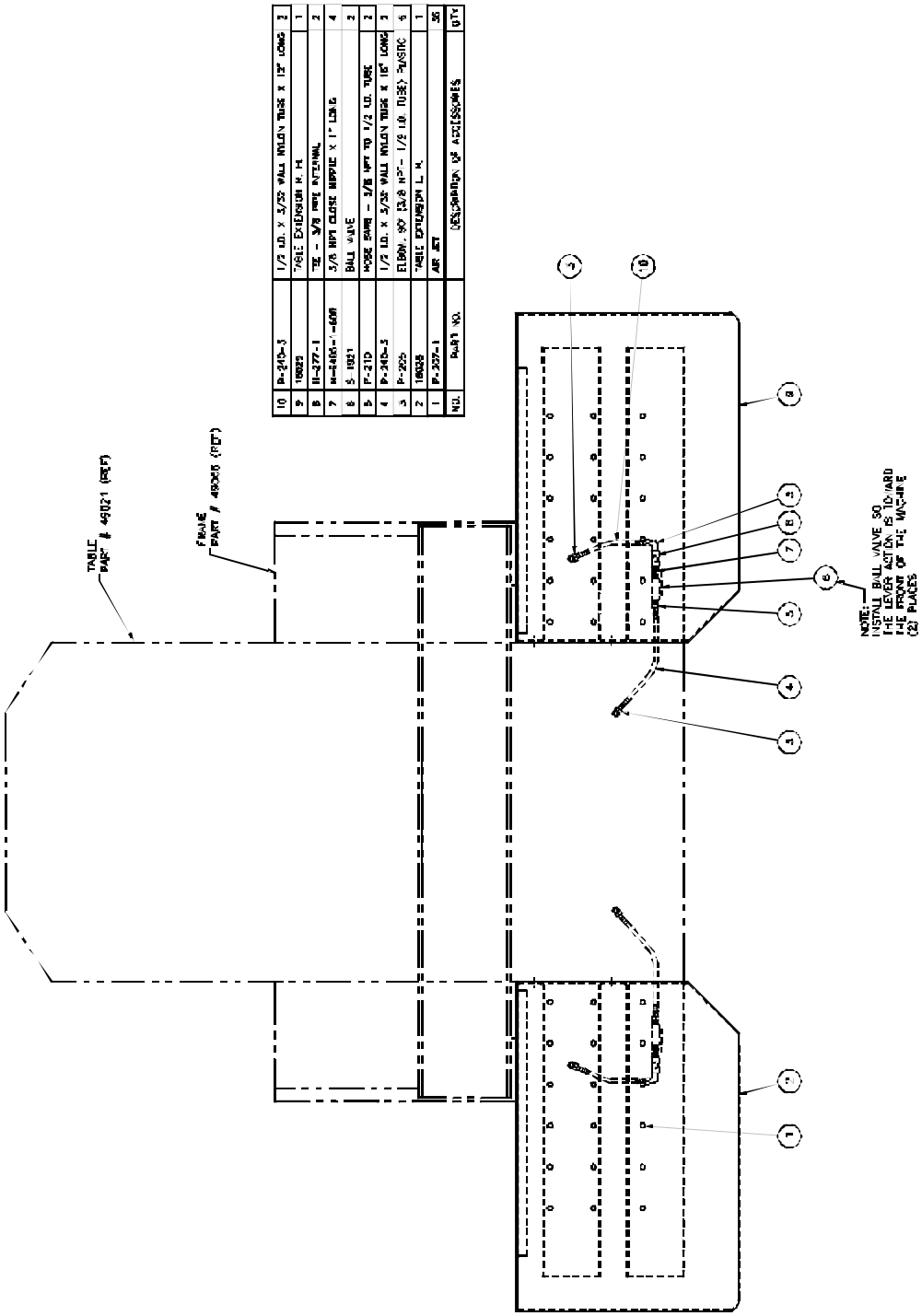

NO.	PART NO.	DESCRIPTION OF ACCESSORIES	QTY
10	P-2403-3	1/2 I.D. X 3/32 WALL NYLON TUBE X 12" LONG	2
9	16029	TABLE EXTENSION H. H.	1
8	H-277-1	TEE - 3/8 MPT INTERNAL	2
7	H-2401-1 -600	3/8 NPT CLOSE NIPPLE X 1" LONG	4
6	S 1021	BALL VALVE	2
5	P-210	HOSE BARB - 3/8 NPT TO 1/2 I.D. TUBE	2
4	P-2403-3	1/2 I.D. X 3/32 WALL NYLON TUBE X 18" LONG	2
3	P-205	ELBOW, 90° 3/8 NPT - 1/2 I.D. TUBE> PLASTIC	5
2	16028	TABLE EXTENSION L. H.	1
1	P-307-1	AIR JET	56

11.34 Jogging Aid Construction Guide – A-12608-( ), Rev. “D”

INSTRUCTIONS:
1. CUT WOOD PARTS TO DESIRED LENGTH.
   SAND SURFACES.
   REMOVE SHARP EDGES EXCEPT AS NOTED.
2. SCREW ALL PARTS SECURELY TOGETHER
   USING WOOD GLUE BETWEEN MATING SURFACES.
3. TO AVOID WARPING APPLY PROTECTIVE COATING:
   (1) COAT WOOD SEALER
   (1) COAT CLEAR FINISH
   SAND LIGHTLY BETWEEN COATS.
4. STORE IN DRY PLACE.

NOTES:
1. PRINT AS FOLLOWS ON ITEM #1:
   CHALLENGE MACHINERY
   GRAND HAVEN, MICH.
   A-12608-( ) MUST NOT BE
   PRINTED AS STATED ABOVE.

ADDITIONAL NOTES:
FOR CLAMP OPENINGS NOT LISTED, DIMENSIONS A & B ARE TO BE DETERMINED AS FOLLOWS:
1. REMOVE FALSE CLAMP PLATE.
2. MEASURE FROM TOP OF TABLE TO BOTTOM FACE OF CLAMP.
3. SUBTRACT 3/8" FROM THIS DIMENSION.

WHEN SELECTING A JOGGING AID FOR A PARTICULAR SIZE CUTTER, BE SURE DIMENSIONS A & B ARE 3/8" LESS THAN THE CLAMP OPENING. (MINUS FALSE CLAMP PLATE) DO NOT DEVIATE.

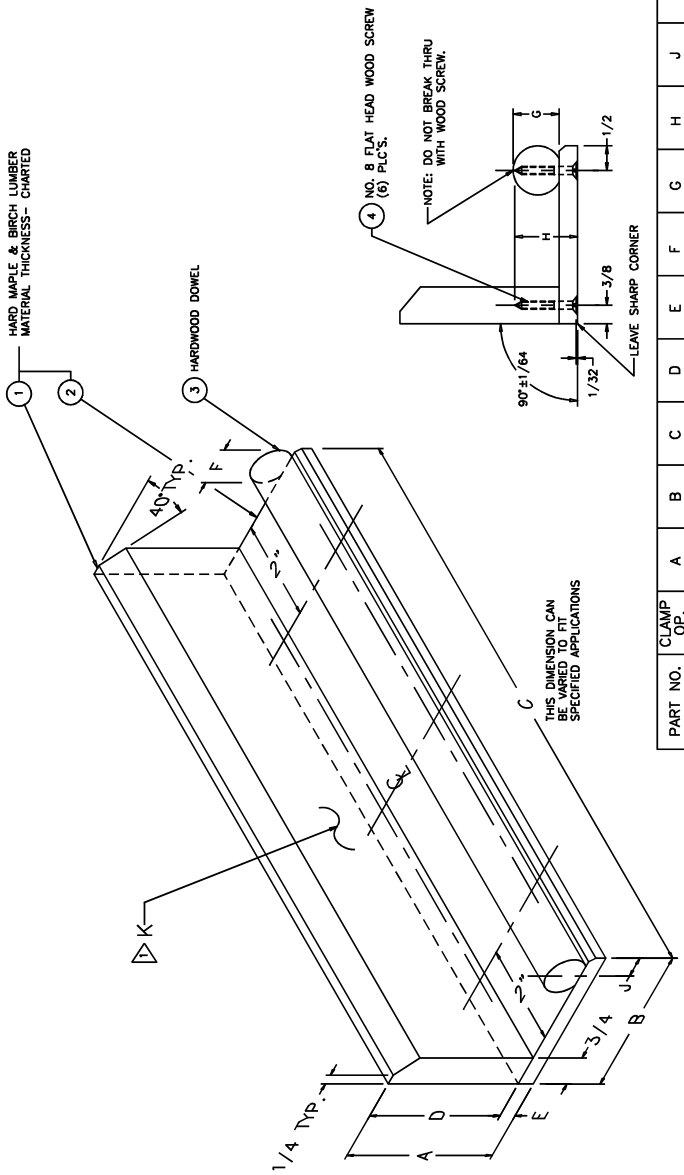

PART NO.	CLAMP OP.	A	B	C	D	E	F	G	H	J	K
A-12608-1	2-1/2	2-1/8	2-1/8	12"	1-3/4	3/8	1"	15/16	1-1/4	1/2	YES
A-12608-2	3-1/4	2-7/8	2-7/8	12"	2-1/2	3/8	1"	15/16	1-1/4	1/2	YES
A-12608-3	3-1/2	3-1/8	3-1/8	12"	2-3/4	3/8	1"	15/16	1-1/4	1/2	YES
A-12608-4	4"	3-5/8	3-5/8	12"	3-1/4	3/8	1"	15/16	1-1/4	1/2	YES
A-12608-5	4-1/2	4-1/8	4-1/8	14"	3-3/8	3/4	1-1/4	1-3/16	1-3/4	2"	YES
A-12608-6	5"	4-5/8	4-5/8	14"	3-7/8	3/4	1-1/4	1-3/16	1-3/4	2"	YES
A-12608-7	5-1/2	5-1/8	5-1/8	14"	4-3/8	3/4	1-1/4	1-3/16	1-3/4	2"	YES
A-12608-8	6"	5-5/8	5-5/8	14"	4-7/8	3/4	1-1/4	1-3/16	1-3/4	2"	YES
A-12608-9	3-1/4	2-7/8	2-7/8	12"	2-1/2	3/8	1"	15/16	1-1/4	1/2	NO

12.0 Program Log

It is always good practice to keep written records of important repeat jobs. In case a channel or the entire memory is accidentally lost. Important jobs will not have to be reprogrammed from scratch. Photocopy this page as needed to build a program log.

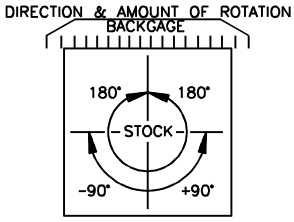

CHANNEL _____ JOB/DESCRIPTION _____
PAGE _____ OF _____

STEP	CUT POSITION	ROTATE
01		
02		
03		
04		
05		
06		
07		
08		
09		
10		
11		
12		
13		
14		
15		
16		
17		
18		
19		
20		
21		
22		
23		
24		
25		
26		
27		
28		
29		
30		
31		
32		
33		
34		
35		

STEP	CUT POSITION	ROTATE
36		
37		
38		
39		
40		
41		
42		
43		
44		
45		
46		
47		
48		
49		
50		
51		
52		
53		
54		
55		
56		
57		
58		
59		
60		
61		
62		
63		
64		
65		
66		
67		
68		
69		
70		

13.0 Channel Log

It is recommended that you keep an abbreviated Channel Log and detailed Program Logs (copy this form) for important or repeat jobs. In the event memory capacity is reached, a glance at the Channel Log will tell you which channels may be cleared to make more room.

CHAN.	JOB/CUSTOMER	SAVE
01		
02		
03		
04		
05		
06		
07		
08		
09		
10		
11		
12		
13		
14		
15		
16		
17		
18		
19		
20		
21		
22		
23		
24		
25		
26		
27		
28		
29		
30		
31		
32		
33		
34		
35		

CHAN.	JOB/CUSTOMER	SAVE
36		
37		
38		
39		
40		
41		
42		
43		
44		
45		
46		
47		
48		
49		
50		
51		
52		
53		
54		
55		
56		
57		
58		
59		
60		
61		
62		
63		
64		
65		
66		
67		
68		
69		
70		

14.0 Safety System Tests

(50 HZ MACHINES ONLY)

Machine manufacturer CHALLENGE Model ______________

Serial Number ___________________

Frequency of test: **THESE TESTS SHOULD BE PERFORMED AT THE BEGINNING OF EACH WORK DAY.**

Turn on the cutter and start the hydraulic motor (see operator's manual for instructions). Enable the electric eye safety system.

Test #1: Using a 32 mm wide test piece, check the object detection capability of the electric eye system. Do this by waving the test piece throughout the electric eye beam area. The "CLEAR" light on the electric eye panel should turn off any time the test piece is in the eye beam area.

Test #2: Press both cut buttons to begin a cut cycle. During the downward motion of the knife or clamp, lean into the path of the electric eye beams. The downward motion of the knife and clamp should stop immediately, and the knife and clamp should return to the "up" position.

If the machine fails either test, DO NOT use machine. Repair or adjustment is necessary.

Please enter date and initials for both tests (make copies of this form if necessary).

Date ______ ______ ______ ______ ______ ______ ______ ______ ______ ______ ______

Test 1 ______ ______ ______ ______ ______ ______ ______ ______ ______ ______ ______

Test 2 ______ ______ ______ ______ ______ ______ ______ ______ ______ ______ ______

Date ______ ______ ______ ______ ______ ______ ______ ______ ______ ______ ______

Test 1 ______ ______ ______ ______ ______ ______ ______ ______ ______ ______ ______

Test 2 ______ ______ ______ ______ ______ ______ ______ ______ ______ ______ ______

Date ______ ______ ______ ______ ______ ______ ______ ______ ______ ______ ______

Test 1 ______ ______ ______ ______ ______ ______ ______ ______ ______ ______ ______

Test 2 ______ ______ ______ ______ ______ ______ ______ ______ ______ ______ ______

Repairs	Initials of Repairer	Date